CLIMATE ACTION RESERVE

Version 3.0 | September 29, 2010

U.S. Livestock

Project Protocol

Climate Action Reserve
601 West 5th Street, Suite 650
Los Angeles, CA 90071
www.climateactionreserve.org

Released September 29, 2010

© 2010 Climate Action Reserve. All rights reserved. This material may not be reproduced, displayed, modified or distributed without the express written permission of the Climate Action Reserve.

Acknowledgements

Staff

Mike McCormick
Derek Markolf
Syd Partridge
Derik Broekhoff
Rachel Tornek
Heather Raven

The Reserve would like to thank SAIC and Kathryn Bickel Goldman for their work on the performance standard analysis.

The Reserve also recognizes the workgroup for their generous contribution of time and expertise, as well as other members of the public who actively participated in the protocol development process.

Workgroup

Susan Wood	AgCert
William Salas	Applied Geosolutions
Patrick Gaffney	California Air Resources Board
Kitty Howard	California Air Resources Board
Doug Thompson	California Air Resources Board
Dan Weller	California Air Resources Board
Steve Schaffer	California Department of Food and Agriculture
Cynthia Cory	CA Farm Bureau
John Shears	CEERT
Suzy Friedman	Environmental Defense
Martha Davis	Inland Empire Utility Agency
Scott Leloni	Manitoba Agriculture, Food and Rural Initiatives
Allen Dusault	Sustainable Conservation
Michael Boccadoro	The Dolphin Group
Melissa Weitz	U.S. EPA
Frank Mitleohner	UC Davis
Paul Martin	Western United Dairymen
Paul Sousa	Western United Dairymen

Table of Contents

Abbreviations and Acronyms 1

1 Introduction 2
2 The GHG Reduction Project 3
2.1 Project Definition 3
2.2 The Project Developer 3
3 Eligibility Rules 4
3.1 Location 4
3.2 Project Start Date 4
3.3 Project Crediting Period 4
3.4 Anaerobic Baseline 5
3.5 Additionality 5
3.6 Regulatory Compliance 6
4 The GHG Assessment Boundary 7
5 Quantifying GHG Emission Reductions 13
5.1 Modeling Baseline Methane Emissions 14
5.2 Calculating Project Methane Emissions 20
5.3 Metered Methane Destruction Comparison 23
5.4 Calculating Baseline and Project Carbon Dioxide Emissions 24
6 Project Monitoring 26
6.1 Monitoring Requirements 26
6.2 Biogas Measurement Instrument QA/QC 28
6.3 Monitoring Parameters 29
7 Reporting Parameters 37
7.1 Project Submittal Documentation 37
7.2 Record Keeping 37
7.3 Reporting and Verification Cycle 38
8 Verification Guidance 42
8.1 Standard of Verification 42
8.2 Monitoring Plan 42
8.3 Verifying Project Eligibility 42
8.4 Core Verification Activities 43
8.5 Verification Period 44
8.6 Livestock Verification Items 45
8.7 Completing Verification 48
9 Glossary of Terms 49
10 References 52

Appendix A Associated Environmental Impacts 54
Appendix B Emission Factor Tables 55
Appendix C Summary of Performance Standard Development 68
Appendix D Data Substitution 75

List of Tables

Table 4.1. Description of all Sources, Sinks, and Reservoirs....10
Table 6.1. Project Monitoring Parameters....30
Table 7.1. Sample Verification Cycle under Option 2....40
Table 7.2. Sample Verification Cycle under Option 3....41
Table 8.1. Summary of Eligibility Criteria for a Livestock Project....43
Table 8.2. Eligibility Verification Items....46
Table 8.3. Quantification Verification Items....47
Table 8.4. Risk Assessment Verification Items....48

List of Figures

Figure 4.1. General Illustration of the GHG Assessment Boundary.... 9
Figure 6.1. Suggested Arrangement of Biogas Metering Equipment....27

List of Equations

Equation 5.1. GHG Reductions from Installing a Biogas Control System....14
Equation 5.2. Modeled Baseline Methane Emissions....15
Equation 5.3. Modeled Baseline Methane Emissions from Anaerobic Storage/Treatment Systems....15
Equation 5.4. Modeled Baseline Methane for Non-Anaerobic Storage/Treatment Systems....17
Equation 5.5. Project Methane Emissions....20
Equation 5.6. Project Methane Emissions from the Biogas Control System....21
Equation 5.7. Methane Emissions from Venting Events....22
Equation 5.8. Project Methane Emissions from the BCS Effluent Pond....22
Equation 5.9. Project Methane Emissions from *Non*-BCS Related Sources....23
Equation 5.10. Metered Methane Destruction....24
Equation 5.11. Carbon Dioxide Emission Calculations....25

List of Appendix Tables

Table B.1. Manure Management System Components....55
Table B.2. Livestock Categories and Typical Average Mass....56
Table B.3. Volatile Solids and Maximum Methane Potential by Livestock Category....56
Table B.4. Biogas Collection Efficiency by Digester Type....56
Table B.5a-d. 2007 Volatile Solid Default Values for Dairy Cows, Heifers, Heifers-Grazing and Cows-Grazing by State (kg/day/1000 kg mass).... 57-60
Table B.6. IPCC 2006 Methane Conversion Factors by Manure Management System Component/Methane Source 'S'....61
Table B.7. Biogas Destruction Efficiency Default Values by Destruction Device....65
Table B.8. CO_2 Emission Factors for Fossil Fuel Use....66
Table B.9. CO_2 Electricity Emission Factors....67
Table C.1. Livestock Population Data for the U.S. and California, 2002....69
Table C.2. Dairy and Swine Operations in the U.S. by Manure Management System....69
Table C.3. Dairy and Swine Operations by Size and Manure Management System....69

Abbreviations and Acronyms

BCS	Biogas control system
CARB	California Air Resources Board
CH_4	Methane
CNG	Condensed natural gas
CO_2	Carbon dioxide
CRT	Climate Reserve Tonne
EPA	U.S. Environmental Protection Agency
GHG	Greenhouse gas
IPCC	Intergovernmental Panel on Climate Change
lb	Pound
LNG	Liquefied natural gas
MT	Metric ton or tonne
N_2O	Nitrous oxide
NG	Natural gas
QA/QC	Quality Assurance/Quality Control
Reserve	Climate Action Reserve
scf	Standard cubic foot
SSR	Sources, sinks, and reservoirs
t	Metric ton or tonne
TAM	Typical average mass

1 Introduction

The Climate Action Reserve's (Reserve) Livestock Project Protocol provides guidance to account for and report greenhouse gas (GHG) emission reductions associated with the installation of a biogas control system (BCS) for manure management on dairy cattle and swine farms. The protocol focuses on quantifying the change in methane emissions, but also accounts for effects on carbon dioxide emissions.

The Climate Action Reserve is a national offsets program working to ensure integrity, transparency and financial value in the U.S. carbon market. It does this by establishing regulatory-quality standards for the development, quantification and verification of GHG emissions reduction projects in North America; issuing carbon offset credits known as Climate Reserve Tonnes (CRTs) generated from such projects; and tracking the transaction of credits over time in a transparent, publicly-accessible system. Adherence to the Reserve's high standards ensures that emission reductions associated with projects are real, permanent, and additional, thereby instilling confidence in the environmental benefit, credibility and efficiency of the U.S. carbon market.

Project developers that install manure biogas capture and destruction technologies use this document to register GHG reductions with the Reserve. The protocol provides eligibility rules, methods to calculate reductions, performance-monitoring instructions, and procedures for reporting project information to the Reserve. Additionally, all project reports receive annual, independent verification by Reserve-approved verification bodies. Guidance for verification bodies to verify reductions is provided in the Verification Program Manual and Section 8 of this protocol.

This project protocol facilitates the creation of GHG emission reductions determined in a complete, consistent, transparent, accurate, and conservative manner, while incorporating relevant sources.[1]

[1] See the WRI/WBCSD GHG Protocol for Project Accounting (Part I, Chapter 4) for a description of GHG accounting principles.

2 The GHG Reduction Project

Manure treated and stored under anaerobic conditions decomposes to produce methane, which, if uncontrolled, is emitted to the atmosphere. This predominantly occurs when livestock operations manage waste with anaerobic liquid-based systems (e.g. in lagoons, ponds, tanks, or pits). Within the livestock sector, the primary drivers of methane generation include the amount of manure produced and the fraction of volatile solids that decompose anaerobically. Temperature and the retention time of manure during treatment and storage also affect methane production.

2.1 Project Definition

For the purpose of this protocol, the GHG reduction project is defined as the installation of a biogas control system that captures and destroys methane gas from anaerobic manure treatment and/or storage facilities on livestock operations.[2] The biogas control system must destroy methane gas that would otherwise have been emitted to the atmosphere in the absence of the project from uncontrolled anaerobic treatment and/or storage of manure.[3]

Captured biogas can be destroyed on-site, or transported for off-site use (e.g. through gas distribution or transmission pipeline), or used to power vehicles. Regardless of how project developers take advantage of the captured biogas, the ultimate fate of the methane must be destruction.

"Centralized digesters" that integrate waste from more than one livestock operation also meet the definition of a GHG reduction project.[4]

2.2 The Project Developer

The "project developer" is an entity that has an active account on the Reserve, submits a project for listing and registration with the Reserve, and is ultimately responsible for all project reporting and verification. Project developers could be livestock facility owners and operators, GHG project financiers, or other entities. The project developer must have clear ownership of the project's GHG reductions. Ownership of the GHG reductions must be established by clear and explicit title, and the project developer must attest to such ownership each time the project is verified by signing the Reserve's Attestation of Title form.[5]

[2] Biogas control systems are commonly called digesters, which may be designed and operated in a variety of ways, from ambient temperature covered lagoons to heated lagoons to mesophilic plug flow or complete mix concrete tank digesters.

[3] The installation of a BCS at an existing livestock operation where the primary manure management system is aerobic (produces little to no methane) may result in an increase of the amount of methane emitted to the atmosphere. Thus, the BCS must digest manure that would primarily be treated in an anaerobic system in the absence of the project in order for the project to meet the definition of a GHG reduction project.

[4] The protocol also does not preclude project developers from co-digesting organic matter in the biogas control system. However, the additional organics could impact the nutrient properties of digester effluent, which project developers should consider when assessing the project's associated water quality impacts.

[5] Attestation of Title form available at http://www.climateactionreserve.org/how/projects/register/project-submittal-forms/.

3 Eligibility Rules

Project developers using this protocol must satisfy the following eligibility rules to register reductions with the Reserve. The criteria only apply to projects that meet the definition of a GHG reduction project.

Eligibility Rule I:	Location	→	*U.S., its territories, and tribal lands*
Eligibility Rule II:	Project Start Date	→	*Within 6 months prior to project submission*
Eligibility Rule III:	Anaerobic Baseline	→	*Demonstrate anaerobic baseline conditions*
Eligibility Rule IV:	Additionality	→	*Meet performance standard*
		→	*Exceed regulatory requirements*
Eligibility Rule V:	Regulatory Compliance	→	*Compliance with all applicable laws*

3.1 Location

Only projects located in the United States and its territories, or on U.S. tribal lands, are eligible to register reductions with the Reserve under this protocol. Livestock projects located in Mexico must use the Mexico Livestock Project Protocol if seeking to register GHG reductions with the Reserve.

3.2 Project Start Date

The start date for a livestock project is defined as the date at which the project's biogas control system becomes operational. For the purposes of this protocol, a BCS is considered *operational* on the date at which the system begins producing and destroying methane gas upon completion of an initial start-up period. This date can be selected by the project developer within a 6 month timeframe from the date at which methane is first produced in the digester.

Projects must be submitted to the Reserve no more than six months after the project start date.

3.3 Project Crediting Period

Project developers are eligible to register GHG reductions with the Reserve according to this protocol for a period of ten years following the project's operational start date. All projects that initially pass the eligibility requirements set forth in this protocol are eligible to register GHG reductions with the Reserve for the duration of the project crediting period (ten years), even if a regulatory agency with authority over a livestock operation passes a rule obligating the installation of a BCS during mid-period.

At the end of a project's first crediting period, a project developer may apply for eligibility under a second crediting period. Thus, the Reserve may issue CRTs for GHG reductions quantified and verified according to the U.S. Livestock Project Protocol for a maximum of two ten year crediting periods after the project start date. Section 3.5.1 and 3.5.2 describe the requirements to qualify for a second crediting period.

3.4 Anaerobic Baseline

Developers of livestock projects must demonstrate that the depth of the anaerobic lagoons or ponds prior to the project's implementation were sufficient to prevent algal oxygen production and create an oxygen-free bottom layer; which means at least 1 meter in depth.[6]

Greenfield livestock projects (i.e. projects that are implemented at new livestock facilities that have no prior manure management system) are eligible only if the project developer can demonstrate that uncontrolled anaerobic storage and/or treatment of manure is common practice in the industry and geographic region where the project is located.

3.5 Additionality

The Reserve will only accept projects that yield surplus GHG reductions that are additional to what would have otherwise occurred. That is, the reductions are above and beyond business-as-usual operation.

Project developers satisfy the "additionality" eligibility rule by passing two tests:

1. The Performance Standard Test
2. The Legal Requirement Test

3.5.1 The Performance Standard Test

Projects pass the Performance Standard Test by meeting a program-wide performance threshold – i.e. a standard of performance applicable to all manure management projects, established on an *ex-ante* basis. The performance threshold represents "better than business-as-usual" manure management. If the project meets the threshold, then it exceeds what would happen under the business-as-usual scenario and generates surplus/additional GHG reductions.

For this protocol, the Reserve uses a technology-specific threshold; sometimes also referred to as a practice-based threshold, where it serves as "best-practice standard" for managing livestock manure. By installing a BCS, a project developer passes the Performance Standard Test.

The Reserve defined this performance standard by evaluating manure management practices in California and the U.S. A summary of the study to establish the threshold is provided in Appendix C.

The Performance Standard Test is applied at the time of the project's start date. All projects that pass this test at the project's start date are eligible to register reductions with the Reserve for the duration of the first project crediting period, even if the Reserve revises the Performance Standard Test in subsequent versions of this protocol during that period. As stated in Section 3.3, the project crediting period is ten years.

[6] This is consistent with the United Nations Framework Convention on Climate Change (UNFCCC) Clean Development Mechanism (CDM) methodology ACM00010 (available at: http://cdm.unfccc.int/methodologies/PAmethodologies/approved.html). For additional information on the design and maintenance of anaerobic wastewater treatment systems, see U.S. Department of Agriculture Natural Resources Conservation Service, Conservation Practice Standard, Waste Storage Facility, No. 313; and U.S. Department of Agriculture Natural Resources Conservation Service, Conservation Practice Standard, Waste Treatment Lagoon, No. 359.

If a project developer wishes to apply for a second crediting period, the project must meet the eligibility requirements of the most current version of this protocol, including any updates to the Performance Standard Test.

3.5.2 The Legal Requirement Test

All projects are subject to a Legal Requirement Test to ensure that the GHG reductions achieved by a project would not otherwise have occurred due to federal, state, or local regulations, or other legally binding mandates. A project passes the Legal Requirement Test when there are no laws, statutes, regulations, court orders, environmental mitigation agreements, permitting conditions, or other legally binding mandates requiring the installation of a BCS at the livestock operation.

The Legal Requirement Test is applied at the time of a project's start date. To satisfy the Legal Requirement Test, project developers must submit a signed Attestation of Voluntary Implementation form[7] prior to the commencement of verification activities for the first verification period. All projects that pass this test at the project's start date are eligible to register reductions with the Reserve for the duration of its first crediting period, even if legal requirements change or new legal requirements are enacted during that period.

If a project developer wishes to apply for a second crediting period, the project must meet the eligibility requirements of the most current version of this protocol, including any updates to the Legal Requirement Test.

The Reserve's analysis of manure management practices in the U.S. identified no regulations that obligate livestock owners to invest in a manure BCS. The analysis looked most closely at recent, stringent California air quality regulations (e.g. SJVAPCD Rule 4570 and Sacramento AQMD Rule 496), and found that installing an anaerobic digester is one of several compliance options, although high capital costs appear to prohibit the use of anaerobic digesters as a practical compliance mechanism for these air quality regulations.

3.6 Regulatory Compliance

As a final eligibility requirement, project developers must attest that the project is in material compliance with all applicable laws relevant to the project activity (e.g. air, water quality, safety, etc.) by signing the Reserve's Attestation of Regulatory Compliance form[7] prior to verification activities commencing for each verification period. Furthermore, project developers are required to disclose in writing to the verifier any and all instances of non-compliance of the project with any law. If a verifier finds that a project is in a state of recurrent non-compliance or non-compliance that is the result of negligence or intent, then CRTs will not be issued for GHG reductions that occurred during the period of non-compliance. Non-compliance solely due to administrative or reporting issues, or due to "acts of nature," will not affect CRT crediting.

[7] Attestation forms are available at http://www.climateactionreserve.org/how/projects/register/project-submittal-forms/.

4 The GHG Assessment Boundary

The GHG Assessment Boundary delineates the GHG sources, sinks, and reservoirs (SSRs) that shall be assessed by project developers to determine the net change in emissions associated with installing a BCS. This protocol's assessment boundary captures sources from waste production to disposal, including off-site manure disposal. However, the calculation procedure only incorporates methane and carbon dioxide, so while nitrous oxide sources are technically within the boundary they are not assessed in the calculation procedure. See Box 4.1 for additional information.

This protocol does not account for carbon dioxide emission reductions associated with displacing grid-delivered electricity or fossil fuel use.

CO_2 emissions associated with the generation and destruction of biogas are considered biogenic emissions[8] (as opposed to anthropogenic) and are not included in the GHG Assessment Boundary. This is consistent with the Intergovernmental Panel on Climate Change's (IPCC) guidelines for captured landfill gas.[9]

Figure 4.1 provides a general illustration of the GHG Assessment Boundary, indicating which SSRs are included or excluded from the boundary. All SSRs within the dashed line are accounted for under this protocol.

Table 4.1 provides greater detail on each SSR and provides justification for the inclusion or exclusion of SSRs and gases from the GHG Assessment Boundary.

[8] The rationale is that carbon dioxide emitted during combustion represents the carbon dioxide that would have been emitted during natural decomposition of the manure. Emissions from the biogas control system do not yield a net increase in atmospheric carbon dioxide because they are theoretically equivalent to the carbon dioxide absorbed during plant/feed growth.

[9] *IPCC Good Practice Guidance and Uncertainty Management in National Greenhouse Gas Inventories*; p.5.10, ftnt 4.

Box 4.1. The Reserve's Treatment of Nitrous Oxide Emissions

This protocol's GHG Assessment Boundary nominally encompasses sources of nitrous oxide emissions in the waste production, waste treatment and storage, and waste disposal source categories. However, project developers do not calculate nitrous oxide impacts. This determination is made for the sake of "conservativeness" since the high levels of uncertainty associated with the methods to assess nitrous oxide production could lead to overestimations of project reductions.

Procedures to calculate nitrous oxide emissions associated with a livestock operation's manure management system and from the application of manure to soils (both direct and indirect) rely on emission factors with at least an uncertainty range of a factor of two – either 100% above or 50% below the default value.[10] The reason for the large uncertainty is the complex emissions pathway from organic nitrogen in livestock waste to nitrous oxide – the nitrification-denitrification cycle.[11]

As the state of science advances and methods to calculate nitrous oxide emissions at the farm-level improve, the Reserve will incorporate them into this protocol. In fact, as the assessment boundary includes sources from waste production to disposal it is set up to integrate nitrous oxide calculations. The Reserve will work with project developers and the research community to develop an appropriate "conservativeness factor" that could sufficiently mitigate possible overestimations of project reductions that stem from uncertainty in nitrous oxide quantification.

This approach is consistent with the Regional Greenhouse Gas Initiative's (RGGI) treatment of nitrous oxide. Under the RGGI Model Rule (January 5, 2007) project developers do not receive credit for reductions in nitrous oxide. The CDM "Consolidated baseline methodology for GHG emission reductions from manure management systems" (ACM0010 V.5) and the U.S. EPA Climate Leaders Offset Project Methodology for Managing Manure with Biogas Recovery Systems (August 2008 Version 1.3) on the other hand allow project developers to calculate decreases in nitrous oxide emissions from sources up to, but excluding, land application.

[10] See IPCC 2006 Guidelines volume 4, chapter 10, table 10.21 and volume 4, chapter 11, table 11.3.

[11] Uncertainty also exists with estimations of baseline methane emission. The Reserve takes steps to reduce this uncertainty by following a calculation approach that is based on the monthly biological performance of the operation's anaerobic manure handling systems that existed pre-project, as predicted by the van't Hoff-Arrhenius equation using site-specific data on temperature, Volatile Solids (VS) loading, and system VS retention time. Furthermore, all existing estimates of uncertainty (of which the Reserve is aware) involve the quantification of nitrous oxide at a national level, not a project-level. The Reserve has been working to evaluate project-level uncertainty. This work is ongoing, but early results suggest that uncertainty levels associated with the quantification of nitrous oxide are more substantial than methane.

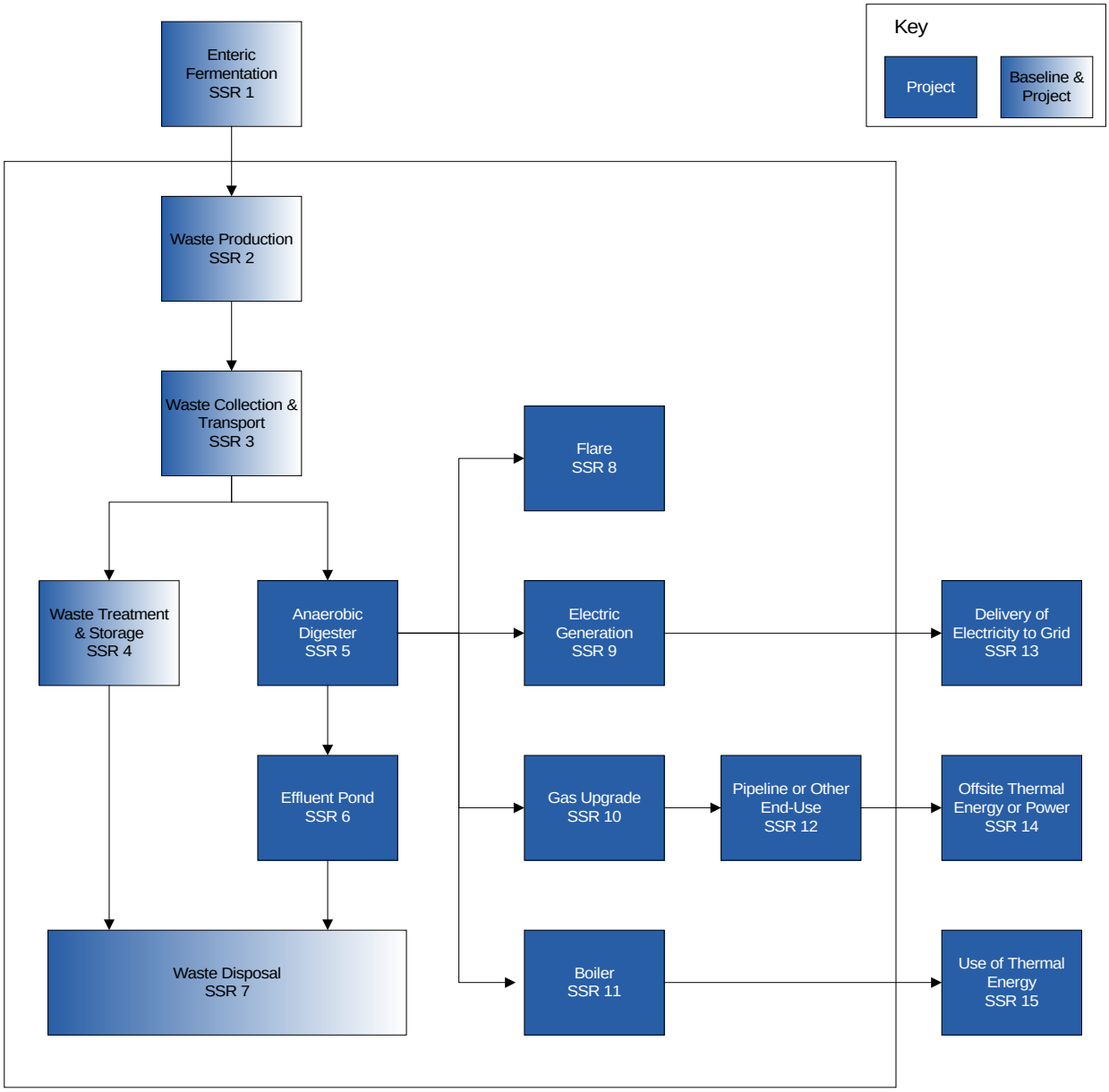

Figure 4.1. General Illustration of the GHG Assessment Boundary

Table 4.1 relates GHG source categories to sources and gases, and indicates inclusion in the calculation methodology. It is intended to be illustrative – GHG sources are indicative for the source category, GHGs in addition to the main GHG are also mentioned, where appropriate.

Table 4.1. Description of all Sources, Sinks, and Reservoirs

SSR	GHG Source	Gas	Relevant to Baseline (B) or Project (P)	Included/ Excluded	Justification/Explanation
1	Emissions from enteric fermentation	CH_4	B, P	*Excluded*	It is very unlikely that a livestock operation would change its feeding strategy to maximize biogas production from a digester; thus impacting enteric fermentation emissions from ruminant animals.
2	Emissions from waste deposits in barn, milking parlor or pasture/corral	N_2O	B, P	*Excluded*	See Box 4.1.
	Emissions from mobile and stationary support equipment	CO_2	B, P	*Included*	If any additional vehicles or equipment are required by the project beyond what is required in the baseline, emissions from such sources shall be accounted for.
		CH_4		*Excluded*	Emission source is assumed to be very small.
		N_2O		*Excluded*	Emission source is assumed to be very small.
3	Emissions from mechanical systems used to collect and transport waste (e.g. engines and pumps for flush systems; vacuums and tractors for scrape systems)	CO_2	B, P	*Included*	If any additional vehicles or equipment are required by the project beyond what is required in the baseline, emissions from such sources shall be accounted for.
		CH_4		*Excluded*	Emission source is assumed to be very small.
		N_2O		*Excluded*	Emission source is assumed to be very small.
	Vehicle emissions (e.g. for centralized digesters)	CO_2		*Included*	If any additional vehicles or fuel use is required by the project beyond what is required in the baseline, emissions from such equipment shall be accounted for.
		CH_4		*Excluded*	Emission source is assumed to be very small.
		N_2O		*Excluded*	Emission source is assumed to be very small.
4	Emissions from waste treatment and storage including: anaerobic lagoons, dry lot	CO_2	B, P	*Excluded*	Biogenic emissions are excluded.
		CH_4		*Included*	Primary source of emissions in the baseline.

SSR	GHG Source	Gas	Relevant to Baseline (B) or Project (P)	Included/ Excluded	Justification/Explanation
	deposits, compost piles, solid storage piles, manure settling basins, aerobic treatment, storage ponds, etc.	N_2O		*Excluded*	See Box 4.1.
	Emissions from support equipment	CO_2		*Included*	If any additional equipment is required by the project beyond what is required in the baseline, emissions from such equipment shall be accounted for.
		CH_4		*Excluded*	Emission source is assumed to be very small.
		N_2O		*Excluded*	Emission source is assumed to be very small.
5	Emissions from the anaerobic digester due to biogas collection inefficiencies and venting events	CH_4	P	*Included*	Project may result in leaked emissions from anaerobic digester.
6	Emissions from the effluent pond	CH_4	P	*Included*	Primary source of emissions from project activities.
		N_2O		*Excluded*	See Box 4.1.
7	Emissions from land application	CH_4	B, P	*Excluded*	Project activity is unlikely to increase emissions relative to baseline activity.
		N_2O	B, P	*Excluded*	See Box 4.1.
	Vehicle emissions for land application and/or off-site transport	CO_2	B, P	*Included*	If any additional vehicle use is required by the project beyond what is required in the baseline, associated additional emissions shall be accounted for.
		CH_4		*Excluded*	Emission source is assumed to be very small.
		N_2O		*Excluded*	Emission source is assumed to be very small.
8	Emissions from combustion during flaring, including emissions from incomplete combustion of biogas	CO_2	P	*Excluded*	Biogenic emissions are excluded.
		CH_4		*Included*	Primary source of emissions from project activities.
		N_2O		*Excluded*	Emission source is assumed to be very small.
9	Emissions from combustion during electric generation, including incomplete combustion of biogas	CO_2	P	*Excluded*	Biogenic emissions are excluded.
		CH_4		*Included*	Primary source of emissions from project activities.
		N_2O		*Excluded*	Emission source is assumed to be very small.

SSR	GHG Source	Gas	Relevant to Baseline (B) or Project (P)	Included/ Excluded	Justification/Explanation
10	Emissions from upgrading biogas for pipeline injection or use as CNG/LNG fuel	CO_2	P	*Included*	Emissions resulting from on-site fossil fuel use and/or grid electricity may be significant.
		CH_4		*Excluded*	Emission source is assumed to be very small.
		N_2O		*Excluded*	Emission source is assumed to be very small.
11	Emissions from combustion at boiler, including emissions from incomplete combustion of biogas	CO_2	P	*Excluded*	Biogenic emissions are excluded.
		CH_4		*Included*	Primary source of emissions from project activities.
		N_2O		*Excluded*	Emission source is assumed to be very small.
12	Emissions from combustion of biogas by end user of pipeline or CNG/LNG, including incomplete combustion	CO_2	P	*Excluded*	Biogenic emissions are excluded.
		CH_4		*Included*	Primary source of emissions from project activities.
		N_2O		*Excluded*	Emission source is assumed to be very small.
13	Delivery and use of project electricity to grid	CO_2	P	*Excluded*	This protocol does not cover displacement of GHG emissions from the use of biogas-generated electricity.
		CH_4			
		N_2O			
14	Off-site thermal energy or power	CO_2	P	*Excluded*	This protocol does not cover displacement of GHG emissions from the use of biogas delivered through pipeline or other end uses.
		CH_4			
		N_2O			
15	Use of project-generated thermal energy	CO_2	P	*Excluded*	This protocol does not cover displacement of GHG emissions from the use of biogas-generated thermal energy.
		CH_4			
		N_2O			
	Project construction and decommissioning emissions	CO_2	P	*Excluded*	Emission source is assumed to be very small.
		CH_4			
		N_2O			

5 Quantifying GHG Emission Reductions

GHG emission reductions from a livestock project are quantified by comparing actual project emissions to baseline emissions at the project site. Baseline emissions are an estimate of the GHG emissions from sources within the GHG Assessment Boundary (see Section 4) that would have occurred in the absence of the livestock project. Project emissions are actual GHG emissions that occur at sources within the GHG Assessment Boundary. Project emissions must be subtracted from the baseline emissions to quantify the project's total net GHG emission reductions (Equation 5.1).

GHG emission reductions are generally quantified and verified on an annual basis. Project developers may choose to verify GHG emission reductions on a more frequent or less frequent basis if they desire (see Section 7.3). The length of time over which GHG emission reductions are quantified and reported to the Reserve is called the "reporting period." The length of time over which GHG reductions are verified is called a "verification period." A verification period may cover multiple reporting periods (see Section 7.3.4). Project developers should take note that some equations to calculate baseline and project emissions are run on a month-by-month basis and activity data monitoring takes place at varying levels of frequency. As applicable, monthly emissions data (for baseline and project) are summed together to calculate emission reductions.

The calculations provided in this protocol are derived from internationally accepted methodologies.[12] Project developers shall use the calculation methods provided in this protocol to determine baseline and project GHG emissions in order to quantify GHG emission reductions.

To support project developers and facilitate consistent and complete emissions reporting, the Reserve has developed an Excel-based calculation tool available at: http://www.climateactionreserve.org/how/protocols/adopted/livestock/current-livestock-project-protocol/. The Reserve *recommends* the use of the Livestock Calculation Tool for all project calculations and emission reduction reports.

The current methodology for quantifying the GHG impact associated with installing a BCS requires the use of both modeled reductions (following Equation 5.2 to Equation 5.4 and Equation 5.6 to Equation 5.9) as well as the utilization of *ex-post* metered data from the BCS to be used as a check on the modeled reductions.

The Reserve recognizes that there can be material differences between modeled methane emission reductions and the actual metered quantity of methane that is captured and destroyed by the BCS due to digester start-up periods, venting events, and other BCS operational issues. These operational issues have the potential to result in substantially less methane destruction than is modeled, leading to an overestimation of GHG reductions in the modeled case.

To address this issue and maintain consistency with international best practice, the Reserve requires the modeled methane emission reduction results to be compared to the *ex-post* metered quantity of methane that is captured and destroyed by the BCS. The lesser of the two values will represent the total methane emission reductions for the reporting period. Equation

[12] The Reserve's GHG reduction calculation method is derived from the Kyoto Protocol's Clean Development Mechanism (ACM0010 V.5), the EPA's Climate Leaders Program (Manure Offset Protocol, August 2008), and the RGGI Model Rule (January 5, 2007).

5.1 below outlines the quantification approach for calculating the emission reductions from the installation of a BCS.[13]

Equation 5.1. GHG Reductions from Installing a Biogas Control System

$$\text{Total GHG Reductions} = (\text{Modeled baseline emissions}_{CH4} - \text{Project emissions}_{CH4}) + (\text{Baseline emissions}_{CO2} - \text{Project emissions}_{CO2})$$

The (*Modeled baseline emissions* $_{CH4,}$ – *Project emissions* $_{CH4}$) term shall be calculated according to Equation 5.2 to Equation 5.4 and Equation 5.6 to Equation 5.9. The resulting aggregated quantity of methane reductions must then be compared to the *ex-post* quantity of methane that is metered and destroyed in the biogas collection system, as expressed in Equation 5.10. In the case that the total *ex-post* quantity of metered and destroyed methane is less than the modeled methane reductions, the metered quantity of destroyed methane will replace the modeled methane reductions.

Therefore, the above equation then becomes:

$$\text{Total GHG Reductions} = (\text{Total quantity of metered and destroyed methane}) + (\text{Baseline emissions}_{CO2} - \text{Project emissions}_{CO2})$$

5.1 Modeling Baseline Methane Emissions

Baseline emissions represent the GHG emissions within the GHG Assessment Boundary that would have occurred if not for the installation of the BCS.[14] For the purposes of this protocol, project developers calculate their baseline emissions according to the manure management system in place prior to installing the BCS. This is referred to as a "continuation of current practices" baseline scenario. Additionally, project developers calculate baseline emissions each year of the project.[15] The procedure assumes there is no BCS in the baseline system. Regarding new livestock operations that install a BCS, project developers establish a modeled baseline scenario using the prevailing system type in use for the geographic area, animal type, and farm size that corresponds to their operation.

The procedure to determine the modeled baseline methane emissions follows Equation 5.2, which combines Equation 5.3 and Equation 5.4.

Equation 5.3 calculates methane emissions from anaerobic manure storage/treatment systems based on site-specific information on the mass of volatile solids degraded by the anaerobic storage/treatment system and available for methane conversion.[16] It incorporates the effects of temperature through the van't Hoff-Arrhenius (*f*) factor and accounts for the retention of volatile solids through the use of monthly assessments. Equation 5.4 is less intensive and applies to non-anaerobic storage/treatment systems. Both Equation 5.3 and Equation 5.4 reflect basic biological principles of methane production from available volatile solids, determine methane

[13] The calculation procedure only addresses direct emissions sources and does not incorporate changes in electricity consumption, which impacts indirect emissions associated with power plants owned and operated by entities other than the livestock operator.
[14] The Reserve has developed the Organic Waste Digestion Project Protocol, which includes co-digesting eligible waste streams with livestock manure. The protocol is available at http://www.climateactionreserve.org/how/protocols/adopted/organic-waste-digestion/current/.
[15] Conversely, under a "static baseline," a project developer would assess baseline emissions once before project implementation and use that value throughout the project lifetime.
[16] Anaerobic storage/treatment systems generally refer to anaerobic lagoons, or storage ponds, etc.

generation for each livestock category, and account for the extent to which the waste management system handles each category's manure.

Equation 5.2. Modeled Baseline Methane Emissions

$$BE_{CH_4} = \left(\sum_{S,L} BE_{CH_4,AS,L} + BE_{CH_4,non-AS,L} \right)$$

Where,			Units
BE_{CH4}	=	Total annual baseline methane emissions, expressed in carbon dioxide equivalent	tCO_2e/yr
$BE_{CH4,AS,L}$	=	Total annual baseline methane emissions from anaerobic storage/treatment systems by livestock category 'L', expressed in carbon dioxide equivalent	tCO_2e/yr
$BE_{CH4,non-AS,L}$	=	Total annual baseline methane emissions from non-anaerobic storage/treatment systems, expressed in carbon dioxide equivalent	tCO_2e/yr

Equation 5.3. Modeled Baseline Methane Emissions from Anaerobic Storage/Treatment Systems

$$BE_{CH_4,AS} = \sum_{L,AS} VS_{\deg,AS,L} \times B_{0,L} \times 0.68 \times 0.001 \times 21$$

Where,			Units
$BE_{CH4,AS}$	=	Total annual baseline methane emissions from anaerobic manure storage/treatment systems, expressed in carbon dioxide equivalent	tCO_2e/yr
$VS_{deg,AS,L}$	=	Annual volatile solids degraded in anaerobic manure storage/treatment system 'AS' from livestock category 'L'	kg dry matter
$B_{0,L}$	=	Maximum methane producing capacity of manure for livestock category 'L' – see Appendix B, Table B.3	m^3 CH_4/kg of VS
0.68	=	Density of methane (1 atm, 60°F)	kg/m^3
0.001	=	Conversion factor from kg to metric tons	
21	=	Global Warming Potential factor of methane to carbon dioxide equivalent	

$$VS_{\deg,AS,L} = \sum_{AS,L} VS_{avail,AS,L} \times f$$

Where,			Units
$VS_{deg,AS,L}$	=	Annual volatile solids degraded by anaerobic manure storage/ treatment system 'AS' by livestock category 'L'	kg dry matter
$VS_{avail,AS,L}$	=	Monthly volatile solids available for degradation from anaerobic manure storage/treatment system 'AS' by livestock category 'L'()	kg dry matter
f	=	The van't Hoff-Arrhenius factor = "the proportion of volatile solids that are biologically available for conversion to methane based on the monthly temperature of the system" [17]	

[17] Mangino, et al.

Equation 5.3. Continued

$$VS_{avail,AS,L} = \left(VS_L \times P_L \times MS_{AS,L} \times dpm \times 0.8\right) + \left(VS_{avail-1,AS} - VS_{\deg-1,AS}\right)$$

Where,			Units
$VS_{avail,AS,L}$	=	Monthly volatile solids available for degradation in anaerobic storage/treatment system 'AS' by livestock category 'L'	kg dry matter
VS_L	=	Volatile solids produced by livestock category 'L' on a dry matter basis. *Important* – refer to Box 5.1 for guidance on using appropriate units for VS_L values from Appendix B	kg/ animal/ day
P_L	=	Annual average population of livestock category 'L' (based on monthly population data)	
$MS_{AS,L}$	=	Percent of manure sent to (managed in) anaerobic manure storage/treatment system 'AS' from livestock category 'L' [18]	%
dpm	=	Days per month	days/ month
0.8	=	System calibration factor [19]	
$VS_{avail-1,AS}$	=	Previous month's volatile solids available for degradation in anaerobic system 'AS' [20]	kg
$VS_{deg-1,AS}$	=	Previous month's volatile solids degraded by anaerobic system 'AS' [21]	kg

$$f = \exp\left[\frac{E\left(T_2 - T_1\right)}{RT_1T_2}\right]$$

Where,			Units
f	=	The van't Hoff-Arrhenius factor	
E	=	Activation energy constant (15,175)	cal/mol
T_1	=	303.16	Kelvin
T_2	=	Monthly average ambient temperature (K = °C + 273). If T_2 < 5 °C then *f* = 0.104	Kelvin
R	=	Ideal gas constant (1.987)	cal/Kmol

[18] The MS value represents the percent of manure that would be sent to (managed by) the anaerobic manure storage/treatment systems in the baseline case – as if the biogas control system was never installed.
[19] Mangino, et al. This factor was derived to "account for management and design practices that result in the loss of volatile solids from the management system."
[20] IPCC 2006 Guidelines (Volume 4, Chapter 10, p. 42); ACM0010 (V2, p.8); and EPA Climate Leaders Manure Offset Protocol (August 2008).
[21] The difference between VSavail-1 and VSdeg-1 represents VS retained in the system and not removed at month's end; thus, VS could accumulate over time. Some VS is assumed to be retained in the system from one year to the next. For anaerobic lagoons, project developers should zero out the VS retained in the system only following the months when the system was completely drained with sludge removal under baseline operating conditions. It is common practice for liquids to be partially removed and applied to fields at agronomic rates; however this activity does not require the VS retained value to be zeroed out. Project developers should not carry-over volatile solids from one month to the next for temporary storage ponds or tanks where the VS-retention is 30 days or less. For these systems project developers do not add "(VSavail-1 – VSdeg-1)."

Equation 5.4. Modeled Baseline Methane for Non-Anaerobic Storage/Treatment Systems

$$BE_{CH_4,nAS} = \left(\sum_{L,S} P_L \times MS_{L,nAS} \times VS_L \times 365 \times MCF_{nAS} \times B_{0,L} \right) \times 0.68 \times 0.001 \times 21$$

Where,			Units
$BE_{CH4,nAS}$	=	Total annual baseline methane emissions from non-anaerobic storage/treatment systems, expressed in carbon dioxide equivalent	tCO_2e/yr
P_L	=	Annual average population of livestock category 'L' (based on monthly population data)	
$MS_{L,nAS}$	=	Percent of manure from livestock category 'L' managed in non-anaerobic storage/treatment systems	%
VS_L	=	Volatile solids produced by livestock category 'L' on a dry matter basis. *Important* – refer to Box 5.1 for guidance on using appropriate units for VS_L values from Appendix B	kg/ animal/ day
365	=	Days in a year	days/yr
$MCF_{,nAS}$	=	Methane conversion factor for non-anaerobic storage/treatment system 'S' – See Appendix B	%
$B_{0,L}$	=	Maximum methane producing capacity for manure for livestock category 'L' – Appendix B, Table B.3	m^3 CH_4/kg of VS dry matter
0.68	=	Density of methane (1 atm, 60°F)	kg/m^3
0.001	=	Conversion factor from kg to metric tons	
21	=	Global Warming Potential factor of methane to carbon dioxide equivalent	

Box 5.1. Daily Volatile Solids for All Livestock Categories

Consistent with international best-practice, it is recommended that appropriate VS_L values for Dairy livestock categories be obtained from the state-specific lookup tables (Tables B.5.a – B.5.f) provided in Appendix B. When possible, use the year corresponding to the appropriate emission year. If the current year's table is not available, use the most current year.

VS_L values for all other livestock can be found in Appendix B, Table B.3.

Important – Units provided for all VS values in Appendix B are in (kg/day/1000kg), in order to get VS_L in the appropriate units (kg/animal/day), the following equation must be used:

$$VS_L = VS_{table} \times \frac{Mass_L}{1000}$$

Where,			Units
VS_L	=	Volatile solid excretion on a dry matter weight basis	kg/ animal/ day
VS_{Table}	=	Volatile solid excretion from lookup table (Table B.3 and Table B.5a - B.5d)	kg/day/1000kg
$Mass_L$	=	Average live weight for livestock category 'L', if site specific data is unavailable, use values from Appendix B, Table B.2	kg

5.1.1 Modeled Baseline Methane Calculation Variables

The calculation procedure uses a combination of site-specific values and default factors.

Population – P_L

The procedure requires project developers to differentiate between livestock categories ('L'), e.g. lactating dairy cows, non-milking dairy cows, heifers, etc. This accounts for differences in methane generation across livestock categories. See Appendix B, Table B.2. The population of each livestock category is monitored on a monthly basis, and for Equation 5.4 averaged for an annual total population.

Volatile solids – VS_L

This value represents the daily organic material in the manure for each livestock category and consists of both biodegradable and non-biodegradable fractions. The VS content of manure is a combination of excreted fecal material (the fraction of a livestock category's diet consumed and not digested) and urinary excretions, expressed in a dry matter weight basis (kg/animal).[22] This protocol requires that the VS value for all livestock categories be determined as outlined in Box 5.1.

$Mass_L$

This value is the annual average live weight of the animals, per livestock category. This data is necessary because default VS values are supplied in units of kg/day/1000kg mass, therefore the average mass of the corresponding livestock category is required in order to convert the units of VS into kg/day/animal. Site specific livestock mass is preferred for all livestock categories. If site specific data is unavailable, Typical Average Mass (TAM) values can be used (Appendix B, Table B.2).

[22] IPCC 2006 Guidelines volume 4, chapter 10, p. 10.42.

Maximum methane production – $B_{0,L}$

This value represents the maximum methane-producing capacity of the manure, differentiated by livestock category ('L') and diet. Project developers use the default B_0 factors from Appendix B, Table B.3.

MS

The MS value apportions manure from each livestock category to appropriate manure management system component ('S'). It reflects the reality that waste from the operation's livestock categories are not managed uniformly. The MS value accounts for the operation's multiple types of manure management systems. It is expressed as a percent (%), relative to the total amount of waste produced by the livestock category. As waste production is normalized for each livestock category, the percentage should be calculated as percent of population for each livestock category. For example, a dairy operation might send 85% of its milking cows' waste to an anaerobic lagoon and 15% could be deposited in a corral. In this situation, an MS value of 85% would be assigned to Equation 5.3 and 15% to Equation 5.4.

Importantly, the MS value indicates where the waste would have been managed in the baseline scenario.

Methane conversion factor – MCF

Each manure management system component has a volatile solids-to-methane conversion efficiency, which represents the degree to which maximum methane production (B_0) is achieved. Methane production is a function of the extent of anaerobic conditions present in the system, the temperature of the system, and the retention time of organic material in the system.[23]

According to this protocol, for anaerobic lagoons, storage ponds, liquid slurry tanks etc., project developers perform a site-specific calculation of the mass of volatile solids degraded by the anaerobic storage/treatment system. This is expressed as "degraded volatile solids" or "VS_{deg}" in Equation 5.3, which equals the system's monthly available volatile solids multiplied by '*f*', the van't Hoff-Arrhenius factor. The '*f*' factor effectively converts total available volatile solids in the anaerobic manure storage/treatment system to methane-convertible volatile solids, based on the monthly temperature of the system.

The multiplication of "VS_{deg}" by "B_0" gives a site-specific quantification of the uncontrolled methane emissions that would have occurred in the absence of a digester – from the anaerobic storage and/or treatment system – taking into account each livestock category's contribution of manure to that system.

This method to calculate methane emissions reflects the site-specific monthly biological performance of the operation's anaerobic manure handling systems that existed pre-project, as predicted by the van't Hoff-Arrhenius equation using farm-level data on temperature, VS loading, and system VS retention time.[24]

Default MCF values for non-anaerobic manure storage/treatment are available in Appendix B, which are used for Equation 5.4.

[23] IPCC 2006 Guidelines volume 4, chapter 10, p. 10.43.
[24] The method is derived from Mangino et al., "Development of a Methane Conversion Factor to Estimate Emissions from Animal Waste Lagoons"

5.2 Calculating Project Methane Emissions

Project emissions are actual GHG emissions that occur within the GHG Assessment Boundary after the installation of the BCS. Project emissions are calculated on an annual, *ex-post* basis. Like baseline emissions, some parameters are monitored on a monthly basis. Methane emissions from manure storage and/or treatment systems other than the digester are modeled much the same as in the baseline scenario.

As shown in Equation 5.5, project methane emissions equal:

- The amount of methane created by the BCS that is not captured and destroyed by the control system, plus
- Methane from the digester effluent storage pond (if necessary), plus
- Methane from sources in the waste treatment and storage category other than the BCS and associated effluent pond. This includes all other manure treatment systems such as compost piles, solids storage, daily spread, etc.

Consistent with ACM0010 and this protocol's baseline methane calculation approach, the formula to account for project methane emissions incorporates all potential sources within the waste treatment and storage category. Non-BCS-related sources follow the same calculation approach as provided in the baseline methane equations. Several activity data for the variables in Equation 5.9 will be the same as those in Equation 5.2 to Equation 5.4.

Although not common under normal digester operation, it is possible that a venting event may occur due to catastrophic failure of digester cover materials, the digester vessel, or the gas collection system. In the event that a catastrophic system failure results in the venting of biogas, the quantity of methane released to the atmosphere shall be estimated according to Equation 5.7 below.

Equation 5.5. Project Methane Emissions

$$PE_{CH4} = [(PE_{CH4,\ BCS} + PE_{CH4,\ EP} + PE_{CH4,\ non\text{-}BCS}) \times 21]$$

Where,			Units
PE_{CH4}	=	Total annual project methane emissions, expressed in carbon dioxide equivalent	tCO_2e/yr
$PE_{CH4,\ BCS}$	=	Annual methane emissions from the BCS – Equation 5.6	tCH_4/yr
$PE_{CH4,\ EP}$	=	Annual methane emissions from the BCS effluent pond – Equation 5.8	tCH_4/yr
$PE_{CH4,\ non\text{-}BCS}$	=	Annual methane emissions from sources in the waste treatment and storage category other than the BCS and associated effluent pond – Equation 5.9	tCH_4/yr
21	=	Global Warming Potential factor of methane to carbon dioxide equivalent	

Equation 5.6. Project Methane Emissions from the Biogas Control System

$$PE_{CH4,BCS} = \left[\left(CH_{4,meter} \right) \left(\left(\frac{1}{BCE} \right) - BDE_{i,weighted} \right) \right] + CH_{4,vent,i}$$

Where,			Units
$PE_{CH4,\ BCS}$	=	Monthly methane emissions from the BCS, to be aggregated annually	tCH_4/yr
$CH_{4,meter}$	=	Monthly quantity of methane collected and metered	tCH_4/ month
BCE	=	Monthly methane collection efficiency of the BCS. Project developers shall use the appropriate default value provided in Table B.4	% (as a decimal)
$BDE_{i,weighted}$	=	Monthly weighted average of all destruction devices used in month i.	% (as a decimal)
$CH_{4,vent,i}$	=	The monthly quantity of methane that is vented to the atmosphere due to BCS venting events, as quantified in Equation 5.7 below.	

$$CH_{4,meter} = F \times (520/T)^{*} \times (P/1)^{*} \times CH_{4,conc} \times 0.0423 \times 0.000454$$

Where,			Units
$CH_{4,meter}$	=	Monthly quantity of methane collected and metered [25]	tCH_4/ month
F	=	Measured volumetric flow of biogas per month	scf/month
T	=	Temperature of the biogas flow (°R = °F +459.67)	°R (Rankine)
P	=	Pressure of the biogas flow	atm
$CH_{4,conc}$	=	Measured methane concentration of biogas from the most recent methane concentration measurement	% (as a decimal)
0.0423	=	Density of methane gas (1atm, 60°F)	$lbsCH_4$/scf
0.000454	=	Conversion factor, lbs to metric tons	

** The terms (520/T) and (P/1) should be omitted if the continuous flow meter internally corrects for temperature and pressure to 60°F and 1atm.*

$$BDE_{i,weighted} = \frac{\sum_{DD} \left(BDE_{DD} \times F_{i,DD} \right)}{F_i}$$

Where,			Units
$BDE_{i,weighted}$	=	Monthly weighted average of all destruction devices used in month i	fraction
BDE_{DD}	=	Default methane destruction efficiency of a particular destruction device 'DD'. See Appendix B for default destruction efficiencies by destruction device[26]	fraction
$F_{i,DD}$	=	Monthly flow of biogas to a particular destruction device 'DD'	scf/month
F_i	=	Total monthly measured volumetric flow of biogas to all destruction devices	scf/month

[25] This value reflects directly measured biogas mass flow and methane concentration in the biogas to the combustion device.

[26] Project developers have the option to use either the default methane destruction efficiencies provided, or site specific methane destruction efficiencies as provided by a state or local agency accredited source test service provider, for each of the combustion devices used in the project.

Equation 5.7. Methane Emissions from Venting Events

$$CH_{4,vent,i} = \left(MS_{BCS} + (F_{pw} \times t)\right) \times CH_{4,conc} \times 0.04230 \times 0.000454$$

Where,			Units
MS_{BCS}	=	Maximum biogas storage of the BCS system[27]	scf
F_{pw}	=	The average total flow of biogas from the digester for the entire week prior to the venting event	scf/day
t	=	The number of days of the month that biogas is venting uncontrolled from the BCS system (can be a fraction)	days

Equation 5.8. Project Methane Emissions from the BCS Effluent Pond[28]

$$PE_{CH4,EP} = VS_{ep} \times B_{o,ep} \times 365 \times 0.68 \times MCF_{ep} \times 0.001$$

Where,			Units
$PE_{CH4,EP}$	=	Methane emissions from the effluent pond	tCH_4/yr
VS_{ep}	=	Volatile solid to effluent pond – 30% of the average daily VS entering the digester[29]	kg/day
$B_{o,ep}$	=	Maximum methane producing capacity (of VS dry matter)[30]	m^3CH_4/kg
365	=	Days in a year	days/yr
0.68	=	Density of methane (1 atm, 60°F)	kg/m^3
MCF_{ep}	=	Methane conversion factor, Appendix B. Project developers shall use the *liquid slurry* MCF value for effluent ponds	Fraction
0.001	=	Conversion factor from kg to metric tons	

$$VS_{ep} = \left(\sum_{L} (VS_L \times P_L \times MS_{L,BCS}) \right) \times 0.3$$

Where,			Units
VS_L	=	Volatile solids produced by livestock category 'L' on a dry matter basis. *Important* – refer to Box 5.1 for guidance on using appropriate units for VS_L values from Appendix B	kg/ animal/ day
P_L	=	Annual average population of livestock category 'L' (based on monthly population data	
$MS_{L,BCS}$	=	Fraction of manure from livestock category 'L' that is managed in the BCS	fraction
0.3	=	Default value representing the amount of VS that exits the digester as a percentage of the VS entering the digester	fraction

[27] If the BCS consists of multiple digester tanks or covered lagoons, the project only need quantify the maximum storage (MS_{BCS}) and biogas flow (F_{pw}) of the component(s) of the BCS that experienced the venting event.
[28] If no effluent pond exists and project developers send digester effluent (VS) to compost piles or apply directly to land, for example, then the VS for these cases should also be tracked using Equation 5.8.
[29] Per ACM0010 (V2 Annex I).
[30] The B_o value for the project effluent pond is not differentiated by livestock category. Project developers could use the B_o value that corresponds with an average of the operation's livestock categories that contributes manure to the biogas control system. Supporting laboratory data and documentation need to be supplied to the verifier to justify the alternative value.

Equation 5.9. Project Methane Emissions from *Non*-BCS Related Sources[31]

$$PE_{CH4,nBCS} = \left(\sum_{L} (EF_{CH4,L}(nBCSs) \times P_L) \right) \times 0.001$$

Where,			Units
$PE_{CH4,\ nBCS}$	=	Methane from sources in the waste treatment and storage category other than the BCS and associated effluent pond	tCH_4/yr
$EF_{CH4,L}$	=	Emission factor for the livestock population from non-BCS-related sources (nBCSs, calculated below)	$kgCH_4$/ head/ yr
P_L	=	Population of livestock category 'L'	
0.001	=	Conversion factor from kg to metric tons	

$$EF_{CH4,L}(nBCSs) = (VS_L \times B_{o,L} \times 365 \times 0.68) \times \left(\sum_{S} (MCF_S \times MS_{L,S}) \right)$$

Where,			Units
$EF_{CH4,L}$	=	Methane emission factor for the livestock population from non-biogas control system related sources (nBCSs)	$kgCH_4$/ head/ yr
VS_L	=	Volatile solids produced by livestock category 'L' on a dry matter basis. *Important* – refer to Box 5.1 for guidance on using appropriate units for VS_L values from Appendix B	kg/ animal/ day
$B_{o,L}$	=	Maximum methane producing capacity for manure for livestock category 'L' (of VS dry matter), Appendix B, Table B.3	m^3 CH_4/kg
365	=	Days in a year	days/yr
0.68	=	Density of methane (1 atm, 60°F)	kg/m^3
MCF_S	=	Methane conversion factor for system component 'S', Appendix B	fraction
$MS_{L,S}$	=	Percent of manure from livestock category L that is managed in non-BCS system component 'S'	fraction

5.3 Metered Methane Destruction Comparison

As described above, the Reserve requires all projects to compare the modeled methane emission reductions for the reporting period, as calculated in Equation 5.2 to Equation 5.4 and Equation 5.6 to Equation 5.9 above, with the actual metered amount of methane that is destroyed in the BCS over the same period. The lesser of the two values is to be used as the total methane emission reductions for the reporting period in question.

In order to calculate the metered methane reductions, the monthly quantity of biogas that is metered and destroyed by the BCS must be aggregated over the reporting period. In the event that a project developer is reporting reductions for a period of time that is less than a full year, the total modeled methane emission reductions would be aggregated over this time period and compared with the metered methane that is destroyed in the BCS over the same period of time. For example, if a project is reporting and verifying only 6 months of data, July to December for instance, then the modeled emission reductions over this 6 month period would be compared to the total metered biogas destroyed over the same six month period, and the lesser of the two values would be used as the total methane emission reduction quantity for this 6 month period.

Equation 5.10 below details the metered methane destruction calculation.

[31] According to this protocol, non-BCS-related sources means manure management system components (system component 'S') other than the biogas control system and the BCS effluent pond (if used).

Equation 5.10. Metered Methane Destruction

$$CH_{4,destroyed} = \sum_{months} (CH_{4,meter} \times BDE_{i,weighted}) \times 21$$

Where,			Units
$CH_{4,destroyed}$	=	Aggregated quantity of methane collected and destroyed during the reporting period	tCO_2e/yr
$CH_{4,meter}$	=	Monthly quantity of methane collected and metered. See Equation 5.6 for calculation guidance	tCH_4/ month
$BDE_{i,weighted}$	=	Monthly weighted average of all destruction devices used in month i[32] See Equation 5.6 for calculation guidance	% (as a decimal)
21	=	Global Warming Potential factor of methane to carbon dioxide equivalent	

5.3.1 Determining Methane Emission Reductions

- If $CH_{4,destroyed}$ is less than ($BE_{CH4} – PE_{CH4}$) as calculated in Equation 5.2 to Equation 5.4 and Equation 5.6 to Equation 5.9 for the reporting period, then the methane emission reductions are equal to $CH_{4,destroyed}$
- Otherwise, the methane emission reductions are equal to ($BE_{CH4} – PE_{CH4}$)

5.4 Calculating Baseline and Project Carbon Dioxide Emissions

Sources of carbon dioxide emissions associated with a project may include electricity use by pumps and equipment, fossil fuel generators used to power pumping systems or milking parlor equipment, tractors that operate in barns or freestalls, on-site manure hauling trucks, or vehicles that transport manure off-site. Per Table 4.1, the carbon dioxide emissions from any additional equipment, vehicles, or fuel use that is required by the project beyond what is required in the baseline shall be accounted for. In practice, project developers shall account for the emissions from any new electric- or fuel-powered equipment or vehicles purchased and installed/operated specifically for the purpose of implementing the project, as well as any additional fuel used by old or new vehicles to collect or transport waste.

Project developers may either use Equation 5.11 below to calculate the net change in carbon dioxide emissions, or, if they can demonstrate during verification that project carbon dioxide emissions are estimated to be equal to or less than 5% of the total baseline emissions, then the project developer may estimate baseline and project carbon dioxide emissions. If an estimation method is used, verifiers shall confirm based on professional judgment that project carbon dioxide emissions are equal to or less than 5% of the total baseline emissions based on documentation and the estimation methodology provided by the project developer. If emissions cannot be confirmed to be below 5%, then Equation 5.11 shall be used. Regardless of the method used, all estimates or calculations of anthropogenic carbon dioxide emissions within the GHG Assessment Boundary must be verified and included in emission reduction calculations.[33]

If calculations or estimates indicate that the project results in a net decrease in carbon dioxide emissions from grid-delivered electricity, mobile and stationary sources, then for quantification

[32] Project developers have the option to use either the default methane destruction efficiencies provided, or site specific methane destruction efficiencies as provided by a state or local agency accredited source test service provider, for each of the combustion devices used in the project.

[33] This is consistent with guidance in WRI's GHG Project Protocol regarding the treatment of significant secondary effects.

purposes the net change in these emissions must be specified as zero (i.e. $CO_{2,net} = 0$ in Equation 5.11).

Carbon dioxide emissions from the combustion of biogas are considered biogenic emissions and are excluded from the GHG Assessment Boundary.

Equation 5.11 below calculates the net change in anthropogenic carbon dioxide emissions resulting from the project activity.

Equation 5.11. Carbon Dioxide Emission Calculations

$$CO_{2,net} = (BE_{CO2MSC} - PE_{CO2MSC})$$

Where,

			Units
$CO_{2,net}$	=	Net change in anthropogenic carbon dioxide emissions from electricity consumption and mobile and stationary combustion sources resulting from project activity	tCO_2/yr
BE_{CO2MSC}	=	Total annual baseline carbon dioxide emissions from electricity consumption and mobile and stationary combustion sources (see equation below)	tCO_2/yr
PE_{CO2MSC}	=	Total annual project carbon dioxide emissions from electricity consumption and mobile and stationary combustion sources (see equation below)	tCO_2/yr

All electricity consumption and stationary and mobile combustion are calculated using the equation:

$$CO_{2,MSC} = \left(\sum_c QE_c \times EF_{CO2,e} \right) + \left[\left(\sum_c QF_c \times EF_{CO2,f} \right) \times 0.001 \right]$$

Where,

			Units
$CO_{2,MSC}$	=	Anthropogenic carbon dioxide emissions from electricity consumption and mobile and stationary combustion sources	tCO_2
QE_c*	=	Quantity of electricity consumed for each emissions source 'c'	MWh/yr
$EF_{CO2,e}$	=	CO_2 emission factor *e* for electricity used; see Appendix B for emission factors by eGRID subregion	tCO_2/MWh
$EF_{CO2,f}$	=	Fuel-specific emission factor *f* from Appendix B	kg CO_2/ MMBTU or kg CO_2/ gallon
QF_c	=	Quantity of fuel consumed for each mobile and stationary emission source 'c'	MMBTU/yr or gallon/yr
0.001	=	Conversion factor from kg to metric tons	

* If total electricity being generated by project activities is $\geq$ the additional electricity consumption, then QE_c shall not be accounted for in the project emissions and shall be omitted from the equation above.

6 Project Monitoring

The Reserve requires a Monitoring Plan to be established for all monitoring and reporting activities associated with the project. The Monitoring Plan will serve as the basis for verification bodies to confirm that the monitoring and reporting requirements in this section and Section 7 have been and will continue to be met, and that consistent, rigorous monitoring and record-keeping is ongoing at the project site. The Monitoring Plan must cover all aspects of monitoring and reporting contained in this protocol and must specify how data for all relevant parameters in Table 6.1 (below) will be collected and recorded.

At a minimum the Monitoring Plan shall stipulate the frequency of data acquisition; a record keeping plan (see Section 7.2 for minimum record keeping requirements); the frequency of instrument field check and calibration activities; and the role of individuals performing each specific monitoring activity. The Monitoring Plan should include QA/QC provisions to ensure that data acquisition and meter calibration are carried out consistently and with precision.

Project developers are responsible for monitoring the performance of the project and operating each component of the biogas collection and destruction system in a manner consistent with the manufacturer's recommendations.

6.1 Monitoring Requirements

The methane capture and control system must be monitored with measurement equipment that directly meters:

- The total flow of biogas, measured continuously and recorded every 15 minutes or totalized and recorded at least daily, adjusted for temperature and pressure, prior to delivery to the destruction device(s)
- The flow of biogas delivered to each destruction device,[34] measured continuously and recorded every 15 minutes or totalized and recorded at least daily, adjusted for temperature and pressure
- The fraction of methane in the biogas, measured with a continuous analyzer or, alternatively, with quarterly measurements

Flow data must be corrected for temperature and pressure at 60°F and 1 atm, either internally or by following the guidance in Equation 5.6.

Figure 6.1 represents the suggested arrangement of the biogas flow meters and methane concentration metering equipment.

[34] A single meter may be used for multiple, identical destruction devices. In this instance, methane destruction in these units will be eligible only if both units are monitored to be operational.

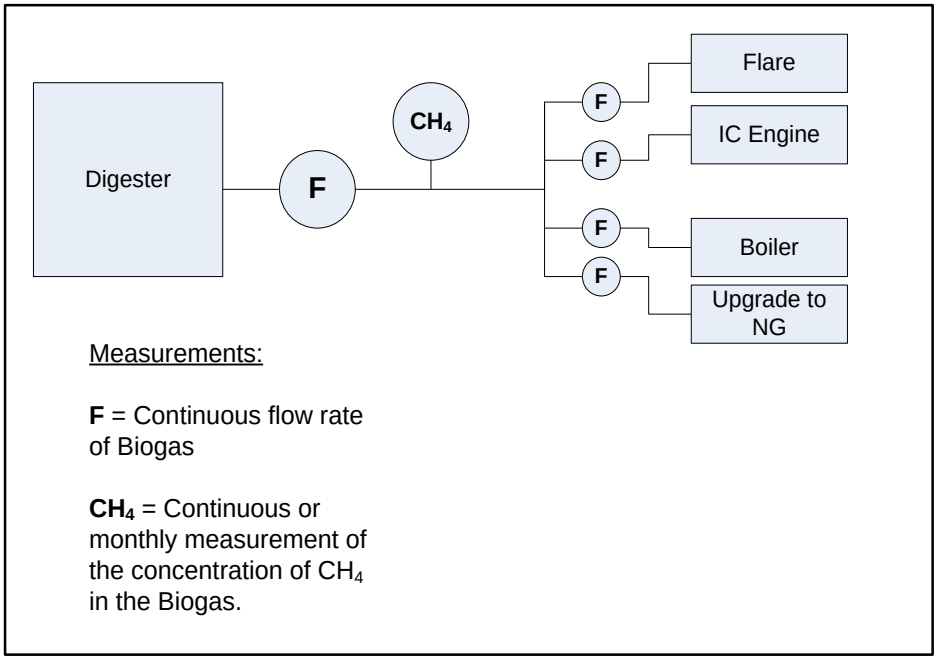

Note: The number of flow meters must be sufficient to track the total flow as well as the flow to each combustion device. The above example includes one more flow meter than would be necessary to achieve this objective.

Figure 6.1. Suggested Arrangement of Biogas Metering Equipment

Operational activity of the destruction devices shall be monitored and documented at least hourly to ensure actual methane destruction. GHG reductions will not be accounted for or credited during periods in which the destruction device is not operational.

If for any reason the destruction device or the operational monitoring equipment (for example, the thermal coupler on the flare) is inoperable, then all metered biogas going to the particular device shall be assumed to be released to atmosphere during the period of inoperability. During the period of inoperability, the destruction efficiency of the device must be assumed to be zero. In Equation 5.10, the monthly destruction efficiency (BDE) value shall be adjusted accordingly. See below for an example BDE adjustment.

Box 6.1. Example BDE Adjustment

As an example, consider a situation where the primary destruction device is an open flare with a BDE of 96%, and it is found to be inoperable for a period of 5 days of a 30 day month. Assume that the total flow of biogas to the flare for the month is 3,000,000 scf, and that the total flow recorded for the 5 day period of inoperability is 500,000 scf. In this case the monthly BDE would be adjusted as follows:

$$BDE = [(0.96 \times 2{,}500{,}000) + (0.0 \times 500{,}000)] / 3{,}000{,}000 = 80\%$$

6.2 Biogas Measurement Instrument QA/QC

All gas flow meters[35] and continuous methane analyzers must be:

- Cleaned and inspected on a quarterly basis, with the activities performed and as found/as left condition of the equipment documented
- Field checked by an appropriately trained individual for calibration accuracy with the percent drift documented, using either a portable instrument (such as a pitot tube)[36] or manufacturer specified guidance, at the end of but no more than two months prior to the end date of the reporting period[37]
- Calibrated by the manufacturer or a certified calibration service per manufacturer's guidance or every 5 years, whichever is more frequent

If the field check on a piece of equipment reveals accuracy outside of a +/- 5% threshold, calibration by the manufacturer or a certified service provider is required for that piece of equipment.

For the interval between the last successful field check and any calibration event confirming accuracy below the +/- 5% threshold, all data from that meter or analyzer must be scaled according to the following procedure. These adjustments must be made for the entire period from the last successful field check until such time as the meter is properly calibrated.

1. For calibrations that indicate under-reporting (lower flow rates, or lower methane concentration), the metered values must be used without correction.
2. For calibrations that indicate over-reporting (higher flow rates, or higher methane concentration), the metered values must be adjusted based on the greatest calibration drift recorded at the time of calibration.

For example, if a project conducts field checks quarterly during a year-long verification period, then only three months of data will be subject at any one time to the penalties above. However, if the project developer feels confident that the meter does not require field checks or calibration on a greater than annual basis, then failed events will accordingly require the penalty to be applied to the entire year's data. Further, frequent calibration may minimize the total accrued drift (by zeroing out any error identified), and result in smaller overall deductions.

In order to provide flexibility in verification, data monitored up to two months after a field check may be verified. As such, the end date of the verification period must be no more than two months after the latest successful field check.

If a portable instrument is used (such as a handheld methane analyzer), the portable instrument shall be calibrated at least annually by the manufacturer or at an ISO 17025 accredited laboratory.

[35] Field checks and calibrations of flow meters shall assess the volumetric output of the flow meter.
[36] It is recommended that a professional third party calibration service be hired to perform flow meter field checks if using pitot tubes or other portable instruments, as these types of devices require professional training in order to achieve accurate readings.
[37] Instead of performing field checks, the project developer may instead have equipment calibrated by the manufacturer or a certified calibration service per manufacturer's guidance, at the end of but no more than two months prior to the end date of the reporting period to meet this requirement.

6.2.1 Missing Data

In situations where the flow rate or methane concentration monitoring equipment is missing data, the project developer shall apply the data substitution methodology provided in Appendix D. If for any reason the destruction device monitoring equipment is inoperable (for example, the thermal coupler on the flare), then no emission reductions can be credited for the period of inoperability.

6.3 Monitoring Parameters

Provisions for monitoring other variables to calculate baseline and project emissions are provided in Table 6.1. The parameters are organized by general project factors then by the calculation methods.

Table 6.1. Project Monitoring Parameters

Parameter	Description	Data unit	calculated (c) measured (m) reference(r) operating records (o)	Measurement frequency	Comment
General Project Parameters					
Regulations	Project developer attestation to compliance with regulatory requirements relating to the manure digester project	All applicable regulations	n/a	Every verification period	Information used to demonstrate compliance with associated regulations and rules, e.g. criteria pollutant and effluent discharge limits. *Verifier:* Determine regulatory agencies responsible for regulating livestock operation; Review regulations and site permits pertinent to livestock operation
L	Type of livestock categories on the farm	Livestock categories	o	Monthly	Select from list provided in Appendix B, Table B.2. *Verifier:* Review herd management software; Conduct site visit; Interview operator.
MS_L	Fraction of manure from each livestock category managed in the baseline waste handling system 'S'	Percent (%)	o	Every reporting period	Reflects the percent of waste handled by the system components 'S' pre-project. Applicable to the entire operation. Within each livestock category, the sum of MS values (for all treatment/storage systems) equals 100%. Select from list provided in Appendix B, Table B.1. *Verifier:* Conduct site visit; Interview operator; Review baseline scenario documentation.
P_L	Average number of animals for each livestock category	Population (# head)	o	Monthly	*Verifier*: Review herd management software; Review local air and water quality agency reporting submissions, if available (e.g. in CA, dairies with more than 500 cows report farm information to CARB).

Parameter	Description	Data unit	calculated (c) measured (m) reference(r) operating records (o)	Measurement frequency	Comment
$Mass_L$	Average live weight by livestock category	kg	o, r	Monthly	From operating records, or if on-site data is unavailable, from lookup table (Appendix B, Table B.2). *Verifier*: Conduct site visit; Interview livestock operator; Review average daily gain records, operating records.
T	Average monthly temperature at location of the operation	°C	m/o	Monthly	Used for van't Hoff calculation and for choosing appropriate MCF value. *Verifier*: Review temperature records obtained from weather service.
Baseline Methane Calculation Variables					
$B_{0,L}$	Maximum methane producing capacity for manure by livestock category	(m^3 CH_4/kgVS)	r	Every reporting period	From Appendix B, Table B.3. *Verifier*: Verify correct value from table used.
MCF_S	Methane conversion factor for manure management system component 'S'	Percent (%)	r	Every reporting period	From Appendix B. Differentiate by livestock category *Verifier*: Verify correct value from table used.
VS_L	Daily volatile solid production	(kg/animal/day)	r, c	Every reporting period	Appendix B, Table B.3 and Table B.5a-d; see Box 5.1 for guidance on converting units from (kg/day/1000kg) to (kg/animal/day). *Verifier*: Ensure appropriate year's table is used; Review data units.
VS_{avail}	Monthly volatile solids available for degradation in each anaerobic storage system, for each livestock category	kg	c, o	Monthly	Calculated value from operating records. Recommend Reserve Livestock Calculation Tool for all calculations. *Verifier*: Ensure proper use of Reserve Livestock Calculation Tool; Review operating records.

Parameter	Description	Data unit	calculated (c) measured (m) reference(r) operating records (o)	Measurement frequency	Comment
VS_{deg}	Monthly volatile solids degraded in each anaerobic storage system, for each livestock category	kg	c, o	Monthly	Calculated value from operating records. Recommend Reserve Livestock Calculation Tool for all calculations. *Verifier*: Ensure proper use of Reserve Livestock Calculation Tool; Review operating records.
f	van't Hoff-Arrhenius factor	n/a	c	Monthly	The proportion of volatile solids that are biologically available for conversion to methane based on the monthly temperature of the system. Recommend Reserve Livestock Calculation Tool for all calculations. *Verifier*: Ensure proper use of Reserve Livestock Calculation Tool; Review calculation; Review temperature data.
Project Methane Calculation Variables – BCS + Effluent Pond					
$CH_{4,\ destroyed}$	Aggregated amount of methane collected and destroyed in the BCS	Metric tons of CH_4	c, m	Every reporting period	Calculated as the collected methane times the destruction efficiency (see the '$CH_{4,meter}$' and 'BDE' parameters below) *Verifier:* Review meter reading data; Confirm proper operation of the destruction device(s); Ensure data is accurately aggregated over the correct amount of time.
$CH_{4,meter}$	Amount of methane collected and metered in BCS	Metric tons of CH_4 (tCH_4)	c, m	Monthly	Calculated from biogas flow and methane fraction meter readings (See 'F' and '$CH_{4,conc}$' parameters below). *Verifier*: Review meter reading data; Confirm proper operation in accordance with the manufacturer's specifications; Confirm meter calibration data.

Parameter	Description	Data unit	calculated (c) measured (m) reference(r) operating records (o)	Measurement frequency	Comment
F	Monthly volume of biogas from digester to destruction devices	scf/month	m	Continuously, aggregated monthly	Measured continuously from flow meter and recorded every 15 minutes or totalized and recorded at least once daily. Data to be aggregated monthly. *Verifier*: Review meter reading data; Confirm proper aggregation of data; Confirm proper operation in accordance with the manufacturer's specifications; Confirm meter calibration data.
T	Temperature of the biogas	°R (Rankine)	m	Continuously, averaged monthly	Measured to normalize volume flow of biogas to STP. No separate monitoring of temperature is necessary when using flow meters that automatically measure temperature and pressure, expressing biogas volumes in normalized cubic feet.
P	Pressure of the biogas	atm	m	Continuously, averaged monthly	Measured to normalize volume flow of biogas to STP. No separate monitoring of pressure is necessary when using flow meters that automatically measure temperature and pressure, expressing biogas volumes in normalized cubic feet.
$CH_{4,conc}$	Methane concentration of biogas	Percent (%)	m	Quarterly	Use a direct sampling approach that yields a value with at least 95% confidence. Samples to be taken at least quarterly. Calibrate monitoring instrument in accordance with the manufacturer's specifications. *Verifier*: Review meter reading data; Confirm proper operation in accordance with the manufacturer's specifications.

Parameter	Description	Data unit	calculated (c) measured (m) reference(r) operating records (o)	Measurement frequency	Comment
BDE	Methane destruction efficiency of destruction device(s)	Percent (%)	r, c	Monthly	Reflects the actual efficiency of the system to destroy captured methane gas – accounts for different destruction devices. See guidance and default factors in Equation 5.6. *Verifier*: Confirm proper and continuous operation in accordance with the manufacturer's specifications.
BCE	Biogas capture efficiency of the anaerobic digester, accounts for gas leaks.	Percent (%)	r	Every reporting period	Use default value from Table B.4 *Verifier:* Review operation and maintenance records to ensure proper functionality of BCS.
VS_{ep}	Average daily volatile solid of digester effluent to effluent pond	kg/day	c	Every reporting period	If project uses effluent pond, equals 30% of the average daily VS entering the digester (From ACM0010 -V2 Annex I). *Verifier*: Review VS_{ep} calculations.
$MS_{L,BCS}$	Fraction of manure from each livestock category managed in the BCS	Percent (%)	o	Every reporting period	Used to determine the total VS entering the digester. The percentage should be tracked in operational records. *Verifier*: Check operational records and conduct site visit.
Bo_{ep}	Maximum methane producing capacity for manure to effluent pond	(m^3 CH_4/kgVS)	c	Every reporting period	An average of the Bo_{ep} value of the operation's livestock categories that contributes manure to the BCS. *Verifier:* Check calculation.
MCF_{ep}	Methane conversion factor for BCS effluent pond	Percent (%)	r	Every reporting period	Referenced from Appendix B. Project developers should use the *liquid slurry* MCF value. *Verifier*: Verify value from table.

Parameter	Description	Data unit	calculated (c) measured (m) reference(r) operating records (o)	Measurement frequency	Comment
MS_{BCS}	The maximum biogas storage of the BCS system	scf	r	Every reporting period	Obtained from digester system design plans. Necessary to quantify the release of methane to the atmosphere due to an uncontrolled venting event.
F_{pw}	The average flow of biogas from the digester for the entire week prior to the uncontrolled venting event	scf/day	m	Weekly	The average flow of biogas can be determined from the daily records from the previous week.
t	The number of days of the month that biogas is venting uncontrolled from the project's BCS.	Days	m, o	Monthly	The number of days of the month that biogas is venting uncontrolled from the project's BCS.
Project Methane Calculation Variables – Non-BCS Related Sources					
$MS_{L,S}$	Fraction of manure from each livestock category managed in non-anaerobic manure management system component 'S'	Percent (%)	o	Monthly	Based on configuration of manure management system, differentiated by livestock category. *Verifier*: Conduct site visit; Interview operator.
$EF_{CH4,L}$ *(nBCSs)*	Methane emission factor for the livestock population from non-BCS-related sources	($kgCH_4$/head/ year)	c	Every reporting period	Emission factor for all non-BCS storage systems, differentiated by livestock category. See Equation 5.9. *Verifiers*: Review calculation, operation records.
Baseline and Project CO_2 Calculation Variables					
$EF_{CO2,f}$	Fuel-specific emission factor for mobile and stationary combustion sources	kg CO_2/MMBTU or kg CO_2/gallon	r	Every reporting period	Refer to Appendix B for emission factors. If biogas produced from digester is used as an energy source, the EF is zero. *Verifier*: Review emission factors.
QF_c	Quantity of fuel used for mobile/stationary combustion sources	MMBTU/year or gallon/year	o, c	Every reporting period	Fuel used by project for manure collection, transport, treatment/storage, and disposal, and stationary combustion sources including supplemental fossil fuels used in combustion device. *Verifier:* Review operating records and quantity calculation.

Parameter	Description	Data unit	calculated (c) measured (m) reference(r) operating records (o)	Measurement frequency	Comment
$EF_{CO2,e}$	Emission factor for electricity used by project	tCO_2/MWh	r	Every reporting period	Refer to Appendix B for emission factors. If biogas produced from digester is used to generate electricity consumed, the EF is zero. *Verifier*: Review emission factors.
QE_c	Quantity of electricity consumed	MWh/year	o, c	Every reporting period	Electricity used by project for manure collection, transport, treatment/storage, and disposal. *Verifier:* Review operating records and quantity calculation.

7 Reporting Parameters

This section provides requirements and guidance on reporting rules and procedures. A priority of the Reserve is to facilitate consistent and transparent information disclosure among project developers. Project developers must submit either a project monitoring report or a verified emission reduction report to the Reserve annually at minimum, depending on the verification option selected by the project developer.

7.1 Project Submittal Documentation

Project developers must provide the following documentation to the Reserve in order to register a livestock project:

- Project Submittal form
- Signed Attestation of Title form
- Signed Attestation of Voluntary Implementation form[38]
- Signed Attestation of Regulatory Compliance form
- Verification Report
- Verification Opinion

Project developers must provide the following documentation each verification period in order for the Reserve to issue CRTs for quantified GHG reductions:

- Verification Report
- Verification Opinion
- Signed Attestation of Title form
- Signed Attestation of Regulatory Compliance form

The above project documentation will be available to the public via the Reserve's online registry. Further disclosure and other documentation may be made available on a voluntary basis through the Reserve. Project forms can be found at http://www.climateactionreserve.org/how/projects/register/project-submittal-forms/.

7.2 Record Keeping

For purposes of independent verification and historical documentation, project developers are required to keep all information outlined in this protocol for a period of 10 years after the information is generated or 7 years after the last verification. This information will not be publicly available, but may be requested by the verifier or the Reserve.

System Information:

- All data inputs for the calculation of the baseline emissions and project emission reductions
- CO_2e annual tonnage calculations
- Relevant sections of the BCS operating permits
- Executed Attestation of Title forms, Attestation of Regulatory Compliance forms, and Attestation of Voluntary Implementation form
- BCS information (installation dates, equipment list, etc.)

[38] A project developer only needs to attest that the project passes the Legal Requirement Test during its first verification period of a crediting period. Meeting the Legal Requirement Test is not required for the remainder of the crediting period after initial verification.

- Biogas flow meter information (model number, serial number, manufacturer's calibration procedures)
- Cleaning and inspection records for all biogas meters
- Field check results for all biogas meters
- Calibration results for all biogas meters
- Methane monitor information (model number, serial number, calibration procedures)
- Biogas flow data (for each flow meter)
- Biogas temperature and pressure readings (only if flow meter does not correct for temperature and pressure automatically)
- Methane concentration monitoring data
- Destruction device monitoring data (for each destruction device)
- Destruction device, methane monitor and biogas flow monitor information (model numbers, serial numbers, calibration procedures)
- Initial and annual verification records and results
- All maintenance records relevant to the BCS, monitoring equipment, and destruction devices

If using a calibrated portable gas analyzer for CH_4 content measurement:

- Date, time, and location of methane measurement
- Methane content of biogas (% by volume) for each measurement
- Methane measurement instrument type and serial number
- Date, time, and results of instrument calibration
- Corrective measures taken if instrument does not meet performance specifications

7.3 Reporting and Verification Cycle

To provide flexibility and help manage verification costs associated with livestock projects, there are three verification options to choose from after a project's initial verification and registration. Regardless of the option selected, project developers must report GHG reductions resulting from project activities during each reporting period. A "reporting period" is a period of time over which a project developer quantifies and reports GHG reductions to the Reserve. Under this protocol, the reporting period cannot exceed 12 months. A "verification period" is the period of time over which GHG reductions are verified. Under this protocol, a verification period may cover multiple reporting periods (see Section 7.3.4). The end date of any verification period must correspond to the end date of a reporting period.

A project developer may choose to utilize one option for the duration of a project's crediting period, or may choose different options at different points during a single crediting period. Regardless of the option selected, reporting periods must be contiguous; there may be no time gaps in reporting during the crediting period of a project once the initial reporting period has commenced.

7.3.1 Initial Reporting and Verification Period

The reporting period for projects undergoing initial verification and registration cannot exceed 12 months, and no more than 12 months of emission reductions can be verified during the initial verification. Once a project is registered and has had at least 6 months of emission reductions verified, the project developer may choose one of the verification options below.

7.3.2 Option 1: Twelve-Month Maximum Verification Period

Under this option, the verification period may not exceed 12 months. Verification with a site visit is required for CRT issuance. The project developer may choose to have a sub-annual verification period (e.g. quarterly or semi-annually).

7.3.3 Option 2: Twelve-Month Verification Period with Desktop Verification

Under this option, the verification period cannot exceed 12 months. However, CRTs may be issued upon successful completion of a desktop verification as long as: (1) Site-visit verifications occur at two-year intervals; and (2) The verifier has confirmed that there have been no significant changes in data management systems, equipment, or personnel since the previous site visit. Desktop verifications must cover all other required verification activities.

In order to utilize this option, there are two additional requirements that must be satisfied:

1. Prior to a desktop verification commencing, the project developer must attest to the verifier that there have been no significant changes to the project's data management systems, project set up/equipment, or site personnel involved with the project since the last site-visit verification. For each verification period, the project developer must provide the following documentation for review by the verifier prior to the desktop verification commencing:

    a. A schematic of system equipment and configuration, detailing any changes since the previous site visit, and any other supporting documentation for system or operation changes
    b. A list of personnel performing key functions related to project activities (personnel who manage and perform monitoring, measurement, and instrument QA/QC activities for the project), and documentation of any personnel or roles or changes since the pervious site visit; this shall include documented handover of personnel changes, including personnel change dates
    c. The sections from the Monitoring Plan that summarize the data management systems and processes in place and a summary of any changes to the systems or processes since the previous site visit

2. Desktop verifications must be conducted by the same verification body that conducted the most recent site-visit verification.

Desktop verifications are allowed only for a single 12-month verification period in between 12-month verification periods that are verified by a site visit. Sub-annual verification periods are not allowed under this option.

Taking into consideration the Reserve's policy that a verification body may provide verification services to a project for a maximum of six consecutive years (see the Verification Program Manual, Section 2.6 for more information), Table 7.1 below details what the verification cycle might look under Option 2.

Table 7.1. Sample Verification Cycle under Option 2

Reporting Period	Verification Activity	Verification Body (VB)
Year 1 *(initial verification)*	Site-visit verification	VB A
Year 2	Desktop verification	VB A
Year 3	Site-visit verification	VB A
Year 4	Desktop verification	VB A
Year 5	Site-visit verification	VB A
Year 6	Desktop verification	VB A
Year 7	Site-visit verification	VB B *(new verification body)*
Year 8	Desktop verification	VB B

7.3.4 Option 3: Twenty-Four Month Maximum Verification Period

Under this option, the verification period cannot exceed 24 months and the project's monitoring plan and a project monitoring report must be submitted to the Reserve for the interim 12 month reporting period. The project monitoring plan and monitoring report must be submitted for projects that choose Option 3 to meet the annual documentation requirement of the Reserve program. They are meant to provide the Reserve with information and documentation on a project's operations and performance. They also demonstrate how the project's monitoring plan was met over the course of the first half of the verification period. They are submitted via the Reserve's online registry, but are not publicly available documents. A monitoring report template for livestock projects is available at http://www.climateactionreserve.org/how/projects/register/project-submittal-forms/. The monitoring plan and monitoring report shall be submitted within 30 days of the end of the reporting period.

Under this option, CRTs may be issued upon successful completion of a site-visit verification for GHG reductions achieved over a maximum of 24 months. CRTs will not be issued based on the Reserve's review of project monitoring plans/reports. Project developers may choose to have a verification period shorter than 24 months.

Taking into consideration the Reserve's policy that a verification body may provide verification services to a project for a maximum of six consecutive years (see the Verification Program Manual, Section 2.6 for more information), Table 7.2 below details what the verification cycle might look under Option 3.

Table 7.2. Sample Verification Cycle under Option 3

Reporting Period	Verification Activity	Verification Body (VB)
Year 1 *(initial verification)*	Site-visit verification	VB A
Year 2	Project monitoring plan and report submitted to Reserve	n/a
Year 3	Site-visit verification for years 2 & 3	VB A
Year 4	Project monitoring plan and report submitted to Reserve	n/a
Year 5	Site-visit verification for years 4 & 5	VB A
Year 6	Project monitoring plan and report submitted to Reserve	n/a
Year 7	Site-visit verification for years 6 & 7	VB B *(new verification body)*
Year 8	Project monitoring plan and report submitted to Reserve	n/a

8 Verification Guidance

This section provides verification bodies with guidance on verifying GHG emission reductions associated with installing a biogas control system for manure management on dairy cattle and swine farms. This verification guidance supplements the Reserve's Verification Program Manual and describes verification activities specifically related to livestock manure management projects.

Verification bodies trained to verify livestock projects must be familiar with the following documents:

- Climate Action Reserve Program Manual
- Climate Action Reserve Verification Program Manual
- Climate Action Reserve U.S. Livestock Project Protocol

The Reserve's Program Manual, Verification Program Manual, and project protocols are designed to be compatible with each other and are available on the Reserve's website at http://www.climateactionreserve.org.

In cases where the Program Manual and/or Verification Program Manual differ from the guidance in this protocol, this protocol takes precedent.

Only ISO-accredited verification bodies trained by the Reserve for this project type are eligible to verify livestock project reports. Verification bodies approved under other project protocol types are not permitted to verify livestock projects. Information about verification body accreditation and Reserve project verification training can be found on the Reserve website at http://www.climateactionreserve.org.

8.1 Standard of Verification

The Reserve's standard of verification for livestock projects is the U.S. Livestock Project Protocol (this document), the Reserve Program Manual, and the Verification Program Manual. To verify a livestock project report, verification bodies apply the guidance in the Verification Program Manual and this section of the protocol to the standards described in Sections 2 through 7 of this protocol. Sections 2 through 7 provide eligibility rules, methods to calculate emission reductions, performance monitoring instructions and requirements, and procedures for reporting project information to the Reserve.

8.2 Monitoring Plan

The Monitoring Plan serves as the basis for verification bodies to confirm that the monitoring and reporting requirements in Section 6 and Section 7 have been met, and that consistent, rigorous monitoring and record-keeping is ongoing at the project site. Verification bodies shall confirm that the Monitoring Plan covers all aspects of monitoring and reporting contained in this protocol and specifies how data for all relevant parameters in Section 6 are collected and recorded.

8.3 Verifying Project Eligibility

Verification bodies must affirm a livestock project's eligibility according to the rules described in this protocol. The table below outlines the eligibility criteria for livestock projects. This table does

not present all criteria for determining eligibility comprehensively; verification bodies must also look to Section 3 and the verification items list in Table 8.2.

Table 8.1. Summary of Eligibility Criteria for a Livestock Project

Eligibility Rule	Eligibility Criteria	Frequency of Rule Application
Start Date	Projects must be submitted for listing within 6 months of the project start date	Once during first verification
Location	United States, its territories, and U.S. tribal areas	Once during first verification
Performance Standard	Installation of a biogas control system that captures and destroys methane gas from anaerobic manure treatment and/or storage facilities on livestock operations	Once during first verification
Anaerobic Baseline	Projects must demonstrate that the depth of the anaerobic lagoons or ponds prior to the project's implementation were sufficient to prevent algal oxygen production and create an oxygen-free bottom layer; which means at least 1 meter in depth	Once during first verification
Legal Requirement Test	Signed Attestation of Voluntary Implementation form and additional documentation demonstrating that the project passes the Legal Requirement Test	Once during first verification
Regulatory Compliance Test	Signed Attestation of Regulatory Compliance form and disclosure of all non-compliance events to verifier, and monitoring; project must be in material compliance with all applicable laws	Every verification

8.4 Core Verification Activities

The U.S. Livestock Project Protocol provides explicit requirements and guidance for quantifying the GHG reductions associated with installing a BCS to capture and destroy methane gas from livestock operations. The Verification Program Manual describes the core verification activities that shall be performed by verification bodies for all project verifications. They are summarized below in the context of a livestock project, but verification bodies must also follow the general guidance in the Verification Program Manual.

Verification is a risk assessment and data sampling effort designed to ensure that the risk of reporting error is assessed and addressed through appropriate sampling, testing, and review. The three core verification activities are:

1. Identifying emission sources, sinks, and reservoirs
2. Reviewing GHG management systems and estimation methodologies
3. Verifying emission reduction estimates

Identifying emission sources, sinks, and reservoirs

The verification body reviews for completeness the SSRs identified for a project, such as energy use waste collection and transport, treatment and storage, and uncombusted methane from the biogas control system.

Reviewing GHG management systems and estimation methodologies

The verification body reviews and assesses the appropriateness of the methodologies and management systems that the livestock project operator uses to gather data and calculate baseline and project emissions.

Verifying emission reduction estimates

The verification body further investigates areas that have the greatest potential for material misstatements and then confirms whether or not material misstatements have occurred. This involves site visits to the project to ensure the systems on the ground correspond to and are consistent with data provided to the verification body. In addition, the verification body recalculates a representative sample of the performance or emissions data for comparison with data reported by the project developer in order to double-check the calculations of GHG emission reductions.

8.5 Verification Period

Per Section 7.3, this protocol provides project developers three verification options for a project after its initial verification and registration in order to provide flexibility and help manage verification costs associated with livestock projects. The different options require verification bodies to confirm additional requirements specific to this protocol, and in some instances, to utilize professional judgment on the appropriateness of the option selected.

8.5.1 Option 1: Twelve-Month Maximum Verification Period

Option 1 does not require verification bodies to confirm any additional requirements beyond what is specified in the protocol.

8.5.2 Option 2: Twelve-Month Verification Period with Desktop Verification

Option 2 requires verification bodies to review the documentation specified in Section 7.3.3 in order to determine if a desktop verification is appropriate. The verifier shall use his/her professional judgment to assess any changes that have occurred related to a project's data management systems, equipment, or personnel and determine whether a site visit should be required as part of verification activities in order to provide a reasonable level of assurance on the project's verification. The documentation shall be reviewed prior to the COI/NOVA renewal being submitted to the Reserve, and the verification body shall provide a summary of its assessment and decision on the appropriateness of a desktop verification when submitting the COI/NOVA renewal. The Reserve reserves the right to review the documentation provided by the project developer and the decision made by the verification body on whether a desktop verification is appropriate.

8.5.3 Option 3: Twenty-Four Month Maximum Verification Period

Under Option 3 (see Section 7.3.4), verification bodies shall look to the project monitoring report submitted by the project developer to the Reserve for the interim 12 month reporting period as a resource to inform its planned verification activities. While verification bodies are not expected to provide a reasonable level of assurance on the accuracy of the monitoring report as part of verification, the verification body shall list a summary of discrepancies between the monitoring report and what was ultimately verified in the List of Findings.

8.6 Livestock Verification Items

The following tables provide lists of items that a verification body needs to address while verifying a livestock project. The tables include references to the section in the protocol where requirements are further specified. The table also identifies items for which a verification body is expected to apply professional judgment during the verification process. Verification bodies are expected to use their professional judgment to confirm that protocol requirements have been met in instances where the protocol does not provide (sufficiently) prescriptive guidance. For more information on the Reserve's verification process and professional judgment, please see the Verification Program Manual.

Note: These tables shall not be viewed as a comprehensive list or plan for verification activities, but rather guidance on areas specific to livestock projects that must be addressed during verification.

8.6.1 Project Eligibility and CRT Issuance

Table 8.2 lists the criteria for reasonable assurance with respect to eligibility and CRT issuance for livestock projects. These requirements determine if a project is eligible to register with the Reserve and/or have CRTs issued for the reporting period. If any requirement is not met, either the project may be determined ineligible or the GHG reductions from the reporting period (or sub-set of the reporting period) may be ineligible for issuance of CRTs, as specified in Sections 2, 3, and 6.

Table 8.2. Eligibility Verification Items

Protocol Section	Eligibility Qualification Item	Apply Professional Judgment?
2.1	Verify that the project meets the definition of a livestock project	No
2.2	Verify ownership of the reductions by reviewing Attestation of Title and other relevant contracts, documentation	No
3.2	Verify eligibility of project start date	No
3.2	Verify accuracy of project start date based on operational records	Yes
3.3	Verify that project is within its 10-year crediting period	No
3.4	Verify that all pre-project manure treatment lagoons/ponds/tanks were of sufficient depth to ensure an oxygen free bottom layer (> 1m)	Yes
3.4	If the project is a greenfield project at a new livestock facility, verify that uncontrolled anaerobic treatment is common practice for the industry in the geographic region where the project is located	Yes
3.5.1	Verify that the project meets the Performance Standard Test	No
3.5.2	Confirm execution of the Attestation of Voluntary Implementation form to demonstrate eligibility under the Legal Requirement Test (initial verification only)	No
3.6	Verify that the project activities comply with applicable laws by reviewing instances of non-compliance provided by the project developer and performing a risk-based assessment to confirm the statements made by the project developer in the Attestation of Regulatory Compliance form	Yes
6	Verify that monitoring meets the requirements of the protocol. If it does not, verify that variance has been approved for monitoring variations	No
6	Verify that all gas flow meters and continuous methane analyzers adhered to the inspection, cleaning, and calibration schedule specified in the protocol. If they do not, verify that a variance has been approved for monitoring variations or that adjustments have been made to data per the protocol requirements	No
6	Verify that adjustments for failed calibrations were properly applied	No
6, Appendix D	If used, verify that data substitution methodology was properly applied	No

8.6.2 Quantification

Table 8.3 lists the items that verification bodies shall include in their risk assessment and re-calculation of the project's GHG emission reductions. These quantification items inform any determination as to whether there are material and/or immaterial misstatements in the project's GHG emission reduction calculations. If there are material misstatements, the calculations must be revised before CRTs are issued.

Table 8.3. Quantification Verification Items

Protocol Section	Quantification Item	Apply Professional Judgment?
4	Verify that all SSRs in the GHG Assessment Boundary are accounted for	No
5	Verify that the modeled baseline is compared with the total amount of methane metered and destroyed by the project, and the lesser of the two values is used as the baseline for the GHG reduction calculation	No
5.1	Verify that the livestock categories (L) are correctly differentiated	Yes
5.1	Verify that the project developer applied the correct VS and B_0 values for each livestock category	No
5.1	Verify that the fraction of manure (MS) handled by the different manure management system components (i.e. GHG source) is satisfactorily represented	Yes
5.1	Verify that the project developer used methane conversion factors (MCF) differentiated by temperature	No
5.1	Verify that the methane baseline emissions calculations for each livestock category were calculated according to the protocol with the appropriate data	No
5.1	Verify that the project developer correctly aggregated methane emissions from sources within each livestock category	Yes
5.4	Verify that the project developer correctly monitored, quantified and aggregated electricity use	Yes
5.2, 5.4	Verify that the project developer correctly monitored, quantified and aggregated fossil fuel use	Yes
5.2, 5.4	Verify that the project developer applied the correct emission factors for fossil fuel combustion and grid-delivered electricity	No
5.2	Verify that the project developer applied the correct methane destruction efficiencies	No
5.2	Verify that the project developer correctly quantified the amount of uncombusted methane	No
5.2	Verify that methane emissions resulting from any venting event are estimated correctly	Yes
5.2	Verify that the correct MCF factor was used for the effluent storage pond	No
5.2, 5.4	Verify that the project emissions calculations were calculated according to the protocol with the appropriate data	No
5.2, 5.1	Verify that the project developer assessed baseline and project emissions on a month-to-month basis	No
5.2	Verify that the project developer correctly monitored and quantified the amount of methane destroyed by the project	No
5.3	Verify that the modeled methane emission reductions are compared with the *ex-post* methane metered and destroyed by the project, and the lesser of the two values is used to quantify project emission reductions	No

8.6.3 Risk Assessment

Verification bodies will review the following items in Table 8.4 to guide and prioritize their assessment of data used in determining eligibility and quantifying GHG emission reductions.

Table 8.4. Risk Assessment Verification Items

Protocol Section	Item that Informs Risk Assessment	Apply Professional Judgment?
6	Verify that the project Monitoring Plan is sufficiently rigorous to support the requirements of the protocol and proper operation of the project	Yes
6	Verify that the BCS was operated and maintained according to manufacturer specifications	No
6	Verify that appropriate monitoring equipment is in place to meet the requirements of the protocol	No
6	Verify that the individual or team responsible for managing and reporting project activities are qualified to perform this function	Yes
6	Verify that appropriate training was provided to personnel assigned to greenhouse gas reporting duties	Yes
6	Verify that all contractors are qualified for managing and reporting greenhouse gas emissions if relied upon by the project developer. Verify that there is internal oversight to assure the quality of the contractor's work	Yes
7.2	Verify that all required records have been retained by the project developer	No

8.7 Completing Verification

The Verification Program Manual provides detailed information and instructions for verification bodies to finalize the verification process. It describes completing a Verification Report, preparing a Verification Opinion, submitting the necessary documents to the Reserve, and notifying the Reserve of the project's verified status.

9 Glossary of Terms

Accredited verifier	A verification firm approved by the Reserve to provide verification services for project developers.
Additionality	Manure management practices that are above and beyond business-as-usual operation, exceed the baseline characterization, and are not mandated by regulation.
Anaerobic	Pertaining to or caused by the absence of oxygen.
Anthropogenic emissions	GHG emissions resultant from human activity that are considered to be an unnatural component of the Carbon Cycle (i.e. fossil fuel combustion, deforestation etc.).
Biogas	The mixture of gas (largely methane) produced as a result of the anaerobic decomposition of livestock manure.
Biogas control system (BCS)	A system designed to capture and destroy the biogas that is produced by the anaerobic treatment and/or storage of livestock manure and/or other organic material. Commonly referred to as a “digester.”
Biogenic CO_2 emissions	CO_2 emissions resulting from the combustion and/or aerobic decomposition of organic matter. Biogenic emissions are considered to be a natural part of the carbon cycle, as opposed to anthropogenic emissions.
Carbon dioxide (CO_2)	The most common of the six primary greenhouse gases, consisting of a single carbon atom and two oxygen atoms.
CO_2 equivalent (CO_2e)	The quantity of a given GHG multiplied by its total global warming potential. This is the standard unit for comparing the degree of warming which can be caused by different GHGs.
Direct emissions	Greenhouse gas emissions from sources that are owned or controlled by the reporting entity.

Emission factor	A unique value for determining an amount of a greenhouse gas emitted for a given quantity of activity data (e.g. metric tons of carbon dioxide emitted per barrel of fossil fuel burned).
Flare	A destruction device that uses an open flame to burn combustible gases with combustion air provided by uncontrolled ambient air around the flame.
Fossil fuel	A fuel, such as coal, oil, and natural gas, produced by the decomposition of ancient (fossilized) plants and animals.
Greenhouse gas (GHG)	Carbon dioxide (CO_2), methane (CH_4), nitrous oxide (N_2O), sulfur hexafluoride (SF_6), hydrofluorocarbons (HFCs) or perfluorocarbons (PFCs).
Global Warming Potential (GWP)	The ratio of radiative forcing (degree of warming to the atmosphere) that would result from the emission of one unit of a given GHG compared to one unit of CO_2.
Indirect emissions	Emissions that are a consequence of the actions of a reporting entity, but are produced by sources owned or controlled by another entity.
Livestock project	Installation of a biogas control system that, in operation, causes a decrease in GHG emissions from the baseline scenario through destruction of the methane component of biogas.
Metric ton (MT or tonne)	A common international measurement for the quantity of GHG emissions, equivalent to about 2204.6 pounds or 1.1 short tons.
Methane (CH_4)	A potent GHG with a GWP of 21, consisting of a single carbon atom and four hydrogen atoms.
MMBTU	One million British thermal units.
Mobile combustion	Emissions from the transportation of materials, products, waste, and employees resulting from the combustion of fuels in company owned or controlled mobile combustion sources (e.g. cars, trucks, tractors, dozers, etc.).
Nitrous oxide (N_2O)	A GHG consisting of two nitrogen atoms and a single oxygen atom.
Project baseline	A business-as-usual GHG emission assessment against which GHG emission reductions from a specific GHG reduction activity are measured.

Project developer	An entity that undertakes a project activity, as identified in the Livestock Project Protocol. A project developer may be an independent third party or the dairy/swine operating entity.
Reporting period	The period of time over which a project developer quantifies and reports GHG reductions to the Reserve. Under this protocol, the reporting period cannot exceed 12 months.
Stationary combustion source	A stationary source of emissions from the production of electricity, heat, or steam, resulting from combustion of fuels in boilers, furnaces, turbines, kilns, and other facility equipment.
van't Hoff-Arrhenius factor (*f*)	The proportion of volatile solids that are biologically available for conversion to methane based on the monthly temperature of the system.[39]
Verification	The process used to ensure that a given participant's greenhouse gas emissions or emission reductions have met the minimum quality standard and complied with the Reserve's procedures and protocols for calculating and reporting GHG emissions and emission reductions.
Verification body	An accredited firm that is able to render a verification opinion and provide verification services for operators subject to reporting under this protocol.
Verification period	The period of time over which GHG reductions are verified. Under this protocol, a verification period may cover multiple reporting periods (see Section 7.3.4). The end date of any verification period must correspond to the end date of a reporting period.

[39] Mangino, et al.

10 References

American Society of Agricultural Engineers, Standard: ASAE D384.2 (2005).

Intergovernmental Panel on Climate Change, Good Practice Guidance and Uncertainty Management in National Greenhouse Gas Inventories (2001).

Intergovernmental Panel on Climate Change, IPCC Guidelines for National Greenhouse Gas Inventories, Chapter 10: Emissions from Livestock and Manure Management (2006).

Intergovernmental Panel on Climate Change, IPCC Guidelines for National Greenhouse Gas Inventories, Chapter 11: N20 Emissions from Managed Soils, and CO2 Emissions from Lime and Urea Application (2006).

Regional Greenhouse Gas Initiative, Draft Model Rule (January 2007).

Mangino, J., Bartram, D. and Brazy, A. Development of a methane conversion factor to estimate emissions from animal waste lagoons. Presented at U.S. EPA's 17th Annual Emission Inventory Conference, Atlanta GA, April 16-18, 2001.

Solid Waste Association of North America, Landfill gas operation and maintenance, manual of practice (1997).

Seebold, J.G., et al., Reaction Efficiency of Industrial Flares: The Perspective of the Past (2003).

United Nations Framework Convention on Climate Change (UNFCCC), Revisions to the Approved Consolidated Baseline Methodology ACM0010, “Consolidated baseline methodology for greenhouse gas emission reductions from manure management systems,” Clean Development Mechanism, Version 02, Sectoral Scopes 13 and 15 (2006).

U.S. Department, of Agriculture Natural Resources Conservation Service, Conservation Practice Standard, Anaerobic Digester—Ambient Temperature, No. 365.

U.S. Department of Agriculture Natural Resources Conservation Service, Conservation Practice Standard, Anaerobic Digester—Controlled Temperature, No. 366.

U.S. Department of Agriculture Natural Resources Conservation Service, Conservation Practice Standard, Waste Storage Facility, No. 313.

U.S. Department of Agriculture Natural Resources Conservation Service, Conservation Practice Standard, Waste Treatment Lagoon, No. 359.

U.S. Department of Energy 1605(b) Technical Guidelines for Voluntary Reporting of Greenhouse Gas Program.

U.S. Environmental Protection Agency, Inventory of U.S. Greenhouse Gas Emissions and Sinks: 1990-2002, 1990-2003, 1990-2004, 1990-2005, 1990-2006, and 1990-2007.

U.S. Environmental Protection Agency – Climate Leaders Draft Manure Offset Protocol (Managing Manure with Biogas Recovery Systems) (October 2006).

U.S. Environmental Protection Agency – Climate Leaders Offset Methodology for Managing Manure with Biogas Recovery Systems V.1.3 (2008).

Association of State Energy Research and Technology Transfer Institutions (ASERTTI), U.S. Environmental Protection Agency AgStar Program, and U.S. Department of Agriculture Rural Development, Protocol for Quantifying and Reporting the Performance of Anaerobic Digestion Systems for Livestock Manures (January 2007).

World Resource Institute and World Business Counsel for Sustainable Development, Greenhouse Gas Protocol for Project Accounting (November 2005).

Appendix A Associated Environmental Impacts

Manure management projects have many documented environmental benefits, including air emission reductions, water quality protection, and electricity generation. These benefits are the result of practices and technologies that are well managed, well implemented, and well designed. However, in cases where practices or technologies are poorly or improperly designed, implemented, and/or managed, local air and water quality could be compromised.

With regard to air quality, there are a number of factors that must be considered and addressed to realize the environmental benefits of a biogas project and reduce or avoid potential negative impacts. Uncontrolled emissions from combustion of biogas may contain between 200 to 300 ppm NOx. The anaerobic treatment process creates intermediates such as ammonia, hydrogen sulfide, orthophosphates, and various salts, all of which must be properly controlled or captured. In addition, atmospheric releases at locations off-site where bio-gas is shipped may negate or decrease the benefit of emissions controls on-site. Thus, while devices such as Selective Catalyst Reduction (SCR) units can reduce NOx emissions and proper treatment system operation can control intermediates, improper design or operation may lead to violations of federal, state, and local air quality regulations as well as release of toxic air contaminants.

With regard to water quality, it is critical that project developers and managers ensure digester integrity and fully consider and address post-digestion management of the effluent in order to avoid contamination of local waterways and groundwater resources. Catastrophic digester failures; leakage from pipework and tanks; and lack of containment in waste storage areas are all examples of potential problems. Further, application of improperly treated digestate and/or improper application timing or rates of digestate to agricultural land may lead to increased nitrogen oxide emissions, soil contamination, and/or nutrient leaching, thus negating or reducing benefits of the project overall.

Project developers must not only follow the protocol to register GHG reductions with the Reserve, they must also comply with all local, state, and national air and water quality regulations. Projects must be designed and implemented to mitigate potential releases of pollutants such as those described, and project managers must acquire the appropriate local permits prior to installation to prevent violation of the law.

The Reserve agrees that GHG emission reduction projects should not undermine air and water quality efforts and will work with stakeholders to establish initiatives to meet both climate-related and localized environmental objectives.

Appendix B Emission Factor Tables

Table B.1. Manure Management System Components

System	Definition
Pasture/Range/ Paddock	The manure from pasture and range grazing animals is allowed to lie as deposited, and is not managed.
Daily spread	Manure is routinely removed from a confinement facility and is applied to cropland or pasture within 24 hours of excretion.
Solid storage	The storage of manure, typically for a period of several months, in unconfined piles or stacks. Manure is able to be stacked due to the presence of a sufficient amount of bedding material or loss of moisture by evaporation.
Dry lot	A paved or unpaved open confinement area without any significant vegetative cover where accumulating manure may be removed periodically.
Liquid/Slurry	Manure is stored as excreted or with some minimal addition of water in either tanks or earthen ponds outside the animal housing, usually for periods less than one year.
Uncovered anaerobic lagoon	A type of liquid storage system designed and operated to combine waste stabilization and storage. Lagoon supernatant is usually used to remove manure from the associated confinement facilities to the lagoon. Anaerobic lagoons are designed with varying lengths of storage (up to a year or greater), depending on the climate region, the volatile solids loading rate, and other operational factors. The water from the lagoon may be recycled as flush water or used to irrigate and fertilize fields.
Pit storage below animal confinements	Collection and storage of manure usually with little or no added water typically below a slatted floor in an enclosed animal confinement facility, usually for periods less than one year.
Anaerobic digester	Animal excreta with or without straw are collected and anaerobically digested in a large containment vessel or covered lagoon. Digesters are designed and operated for waste stabilization by the microbial reduction of complex organic compounds to CO2 and CH4, which is captured and flared or used as a fuel.
Burned for fuel	The dung and urine are excreted on fields. The sun dried dung cakes are burned for fuel.
Cattle and Swine deep bedding	As manure accumulates, bedding is continually added to absorb moisture over a production cycle and possibly for as long as 6 to 12 months. This manure management system also is known as a bedded pack manure management system and may be combined with a dry lot or pasture.
Composting – In-vessel*	Composting, typically in an enclosed channel, with forced aeration and continuous mixing.
Composting – Static pile*	Composting in piles with forced aeration but no mixing.
Composting – Intensive windrow*	Composting in windrows with regular (at least daily) turning for mixing and aeration.
Composting – Passive windrow*	Composting in windrows with infrequent turning for mixing and aeration.
Aerobic treatment	The biological oxidation of manure collected as a liquid with either forced or natural aeration. Natural aeration is limited to aerobic and facultative ponds and wetland systems and is due primarily to photosynthesis. Hence, these systems typically become anoxic during periods without sunlight.

*Composting is the biological oxidation of a solid waste including manure usually with bedding or another organic carbon source typically at thermophilic temperatures produced by microbial heat production.
Source: 2006 IPCC Guidelines for National Greenhouse Gas Inventories, Chapter 10: Emissions from Livestock and Manure Management, Table 10.18: Definitions of Manure Management Systems, p. 10.49.

Table B.2. Livestock Categories and Typical Average Mass

Livestock Category (L)	Livestock Typical Average Mass (TAM) in kg
Dairy cows (on feed)	604[b]
Non-milking dairy cows (on feed)	684[a]
Heifers (on feed)	476[b]
Bulls (grazing)	750[b]
Calves (grazing)	118[b]
Heifers (grazing)	420[b]
Cows (grazing)	533[b]
Nursery swine	12.5[a]
Grow/finish swine	70[a]
Breeding swine	198[b]

Sources for TAM:
[a.] American Society of Agricultural Engineers (ASAE) Standards 2005, ASAE D384.2.
[b.] Environmental Protection Agency (EPA), Inventory of US GHG Emissions and Sinks 1990-2006 (2007), Annex 3, Table A-161, pg. A-195.

Table B.3. Volatile Solids and Maximum Methane Potential by Livestock Category

Livestock category (L)	VS_L (kg/day/1,000 kg mass)	$B_{o,L}$ [b] (m^3 CH_4/kg VS added)
Dairy cows	See Appendix B, Tables 5a-e	0.24
Non-milking dairy cows	5.56	0.24
Heifers	See Appendix B, Tables 5a-e	0.17
Bulls (grazing)	6.04[b]	0.17
Calves (grazing)	6.41[b]	0.17
Heifers (grazing)	See Appendix B, Tables 5a-e	0.17
Cows (grazing)	See Appendix B, Tables 5a-e	0.17
Nursery swine	8.89[b]	0.48
Grow/finish swine	5.36[b]	0.48
Breeding swine	2.71[b]	0.35

[a.] American Society of Agricultural Engineers (ASAE) Standards 2005, ASAE D384.2, VS_L(kg/day per animal) from table 1.b (p.2) converted to (kg/day per 1,000 kg mass) using average Live Weight (kg)values from table 5c (p.7).
[b.] Environmental Protection Agency (EPA) – Climate Leaders Draft Manure Offset Protocol, October 2006, Table IIa: Animal Waste Characteristics (VS, Bo, and N_{ex} rates), p. 18.

Table B.4. Biogas Collection Efficiency by Digester Type

Digester Type	Cover Type	Biogas Collection Efficiency (BCE) as a decimal
Covered Anaerobic Lagoon	Bank-to-Bank, impermeable	0.95 (95%)
Complete mix, plug flow, or fixed film digester	Enclosed vessel	0.98 (98%)

Source: U.S. EPA Climate Leaders, Offset Project Methodology for Managing Manure and Biogas Recovery Systems, 2008. Table IIf.

Table B.5a. 2007 Volatile Solid Default Values for Dairy Cows, Heifers, Heifers-Grazing and Cows-Grazing by State (kg/day/1000 kg mass)

State	VS Dairy Cow	VS Heifer	VS Heifer –Grazing	VS Cows-Grazing
Alabama	8.02	7.42	7.82	7.02
Alaska	8.18	7.42	10.08	9.02
Arizona	10.55	7.42	10.41	9.02
Arkansas	7.11	8.22	7.87	7.00
California	8.98	7.42	7.92	6.85
Colorado	9.11	7.42	7.65	6.46
Connecticut	8.22	6.70	7.66	6.90
Delaware	7.60	6.70	7.89	6.90
Florida	8.40	7.42	7.77	7.02
Georgia	8.80	7.42	7.89	7.02
Hawaii	7.52	7.42	10.30	9.02
Idaho	10.34	7.42	10.80	9.02
Illinois	8.08	7.42	8.11	6.91
Indiana	8.49	7.42	8.01	6.91
Iowa	8.43	7.42	8.20	6.91
Kansas	8.35	7.42	7.68	6.46
Kentucky	7.70	7.42	7.97	7.02
Louisiana	6.88	8.22	7.75	7.00
Maine	7.88	6.70	7.66	6.90
Maryland	7.94	6.70	7.85	6.90
Massachusetts	7.69	6.70	7.78	6.90
Michigan	9.05	7.42	7.95	6.91
Minnesota	8.13	7.42	8.05	6.91
Mississippi	8.09	7.42	7.85	7.02
Missouri	7.21	7.42	7.88	6.91
Montana	8.05	7.42	7.21	6.46
Nebraska	7.98	7.42	7.64	6.46
Nevada	9.75	7.42	10.5	9.02
New Hampshire	8.58	6.70	7.78	6.90
New Jersey	7.64	6.70	7.92	6.90
New Mexico	10.03	7.42	10.64	9.02
New York	8.24	6.70	7.99	6.90
North Carolina	9.07	7.42	7.85	7.02
North Dakota	7.29	7.42	7.40	6.46
Ohio	7.94	7.42	7.94	6.91
Oklahoma	8.04	8.22	8.09	7.00
Oregon	9.49	7.42	10.61	9.02
Pennsylvania	8.27	6.70	8.03	6.90
Rhode Island	7.56	6.70	7.66	6.90
South Carolina	8.73	7.42	7.85	7.02
South Dakota	8.24	7.42	7.50	6.46
Tennessee	8.21	7.42	7.92	7.02
Texas	9.19	8.22	8.20	7.00
Utah	9.75	7.42	10.58	9.02
Vermont	7.95	6.70	7.92	6.90
Virginia	8.64	7.42	7.95	7.02
Washington	10.54	7.42	10.87	9.02
West Virginia	7.29	6.70	7.82	6.90
Wisconsin	8.25	7.42	7.88	6.91
Wyoming	8.13	7.42	7.34	6.46

Source: Environmental Protection Agency (EPA)-U.S. Inventory of GHG Sources and Sinks 1990-2007 (2009), Annex A Table A -171 pg. A -204.

Table B.5b. 2006 Volatile Solid Default Values for Dairy Cows, Heifers, Heifers-Grazing and Cows-Grazing by State (kg/day/1000 kg mass)

State	VS Dairy Cow	VS Heifer	VS Heifer –Grazing	VS Cows-Grazing
Alabama	8.28	6.64	7.55	6.74
Alaska	7.87	7.09	9.96	8.71
Arizona	11.41	7.09	9.99	8.71
Arkansas	7.55	6.48	7.53	6.72
California	9.59	6.13	7.37	6.57
Colorado	9.98	6.10	6.93	6.19
Connecticut	8.87	6.10	7.42	6.62
Delaware	8.33	6.10	7.43	6.62
Florida	8.88	6.64	7.55	6.74
Georgia	9.45	6.64	7.56	6.74
Hawaii	8.20	7.09	9.97	8.71
Idaho	11.23	7.09	10.02	8.71
Illinois	8.84	6.10	7.45	6.63
Indiana	9.07	6.10	7.44	6.63
Iowa	9.11	6.10	7.46	6.63
Kansas	9.34	6.10	6.93	6.19
Kentucky	7.89	6.64	7.56	6.74
Louisiana	7.28	6.48	7.52	6.72
Maine	8.47	6.10	7.42	6.62
Maryland	8.23	6.10	7.43	6.62
Massachusetts	8.31	6.10	7.41	6.62
Michigan	9.70	6.10	7.44	6.63
Minnesota	8.66	6.10	7.45	6.63
Mississippi	8.38	6.64	7.55	6.74
Missouri	7.91	6.10	7.43	6.63
Montana	8.67	6.10	6.90	6.19
Nebraska	8.59	6.10	6.93	6.19
Nevada	10.68	7.09	9.99	8.71
New Hampshire	8.94	6.10	7.42	6.62
New Jersey	7.97	6.10	7.43	6.62
New Mexico	10.96	7.09	10.00	8.71
New York	8.75	6.10	7.44	6.62
North Carolina	9.53	6.64	7.56	6.74
North Dakota	7.53	6.10	6.91	6.19
Ohio	8.42	6.10	7.44	6.63
Oklahoma	8.58	6.48	7.55	6.72
Oregon	10.12	7.09	9.99	8.71
Pennsylvania	8.89	6.10	7.44	6.62
Rhode Island	8.28	6.10	7.42	6.62
South Carolina	8.86	6.64	7.55	6.74
South Dakota	8.66	6.10	6.92	6.19
Tennessee	8.64	6.64	7.56	6.74
Texas	10.02	6.48	7.56	6.72
Utah	10.55	7.09	10.00	8.71
Vermont	8.60	6.10	7.43	6.62
Virginia	9.17	6.64	7.56	6.74
Washington	11.47	7.09	10.01	8.71
West Virginia	7.73	6.10	7.43	6.62
Wisconsin	8.73	6.10	7.44	6.63
Wyoming	8.38	6.10	6.91	6.19

Source: Environmental Protection Agency (EPA)-U.S. Inventory of GHG Sources and Sinks 1990-2006 (2007), Annex A Table A -163 pg. A -186.

Table B.5c. 2005 Volatile Solid Default Values for Dairy Cows, Heifers, Heifers-Grazing and Cows-Grazing by State (kg/day/1000 kg mass)

State	VS Dairy Cow	VS Heifer	VS Heifer –Grazing	VS Cows-Grazing
Alabama	8.76	6.81	7.21	6.74
Alaska	11.03	6.81	9.47	8.71
Arizona	11.03	6.81	9.53	8.71
Arkansas	9.19	7.56	7.19	6.72
California	9.47	6.81	7.06	6.57
Colorado	8.97	6.81	6.66	6.19
Connecticut	8.62	6.13	7.09	6.62
Delaware	8.62	6.13	7.13	6.62
Florida	8.76	6.81	7.19	6.74
Georgia	8.76	6.81	7.22	6.74
Hawaii	11.03	6.81	9.49	8.71
Idaho	11.03	6.81	9.58	8.71
Illinois	8.74	6.81	7.14	6.63
Indiana	8.74	6.81	7.13	6.63
Iowa	8.74	6.81	7.16	6.63
Kansas	8.97	6.81	6.67	6.19
Kentucky	8.76	6.81	7.23	6.74
Louisiana	9.19	7.56	7.18	6.72
Maine	8.62	6.13	7.08	6.62
Maryland	8.62	6.13	7.11	6.62
Massachusetts	8.62	6.13	7.07	6.62
Michigan	8.74	6.81	7.13	6.63
Minnesota	8.74	6.81	7.14	6.63
Mississippi	8.76	6.81	7.21	6.74
Missouri	8.74	6.81	7.11	6.63
Montana	8.97	6.81	6.59	6.19
Nebraska	8.97	6.81	6.66	6.19
Nevada	11.03	6.81	9.54	8.71
New Hampshire	8.62	6.13	7.08	6.62
New Jersey	8.62	6.13	7.10	6.62
New Mexico	11.03	6.81	9.55	8.71
New York	8.62	6.13	7.13	6.62
North Carolina	8.76	6.81	7.20	6.74
North Dakota	8.97	6.81	6.63	6.19
Ohio	8.74	6.81	7.11	6.63
Oklahoma	9.19	7.56	7.23	6.72
Oregon	11.03	6.81	9.54	8.71
Pennsylvania	8.62	6.13	7.12	6.62
Rhode Island	8.62	6.13	7.08	6.62
South Carolina	8.76	6.81	7.21	6.74
South Dakota	8.97	6.81	6.64	6.19
Tennessee	8.76	6.81	7.21	6.74
Texas	9.19	7.56	7.24	6.72
Utah	11.03	6.81	9.55	8.71
Vermont	8.62	6.13	7.10	6.62
Virginia	8.76	6.81	7.23	6.74
Washington	11.03	6.81	9.59	8.71
West Virginia	8.62	6.13	7.09	6.62
Wisconsin	8.74	6.81	7.12	6.63
Wyoming	8.97	6.81	6.62	6.19

Source: Environmental Protection Agency (EPA)-U.S. Inventory of GHG Sources and Sinks 1990-2005 (2006), Annex A Table A -163 pg. A -186.

Table B.5d. 2004 Volatile Solid Default Values for Dairy Cows, Heifers, Heifers-Grazing and Cows-Grazing by State (kg/day/1000 kg mass)

State	VS Dairy Cow	VS Heifer	VS Heifer –Grazing	VS Cows-Grazing
Alabama	8.47	6.81	7.24	6.74
Alaska	10.87	6.81	9.52	8.71
Arizona	10.87	6.81	9.57	8.71
Arkansas	8.55	7.56	7.23	6.72
California	9.35	6.81	7.12	6.57
Colorado	8.64	6.81	6.75	6.19
Connecticut	8.41	6.13	7.14	6.62
Delaware	8.41	6.13	7.26	6.62
Florida	8.47	6.81	7.21	6.74
Georgia	8.47	6.81	7.24	6.74
Hawaii	10.87	6.81	9.56	8.71
Idaho	10.87	6.81	9.68	8.71
Illinois	8.51	6.81	7.22	6.63
Indiana	8.51	6.81	7.2	6.63
Iowa	8.51	6.81	7.25	6.63
Kansas	8.64	6.81	6.75	6.19
Kentucky	8.47	6.81	7.28	6.74
Louisiana	8.55	7.56	7.19	6.72
Maine	8.41	6.13	7.11	6.62
Maryland	8.41	6.13	7.17	6.62
Massachusetts	8.41	6.13	7.11	6.62
Michigan	8.51	6.81	7.2	6.63
Minnesota	8.51	6.81	7.21	6.63
Mississippi	8.47	6.81	7.23	6.74
Missouri	8.51	6.81	7.17	6.63
Montana	8.64	6.81	6.61	6.19
Nebraska	8.64	6.81	6.75	6.19
Nevada	10.87	6.81	9.6	8.71
New Hampshire	8.41	6.13	7.11	6.62
New Jersey	8.41	6.13	7.15	6.62
New Mexico	10.87	6.81	9.64	8.71
New York	8.41	6.13	7.19	6.62
North Carolina	8.47	6.81	7.23	6.74
North Dakota	8.64	6.81	6.69	6.19
Ohio	8.51	6.81	7.18	6.63
Oklahoma	8.55	7.56	7.3	6.72
Oregon	10.87	6.81	9.62	8.71
Pennsylvania	8.41	6.13	7.18	6.62
Rhode Island	8.41	6.13	7.11	6.62
South Carolina	8.47	6.81	7.25	6.74
South Dakota	8.64	6.81	6.7	6.19
Tennessee	8.47	6.81	7.24	6.74
Texas	8.55	7.56	7.32	6.72
Utah	10.87	6.81	9.62	8.71
Vermont	8.41	6.13	7.15	6.62
Virginia	8.47	6.81	7.27	6.74
Washington	10.87	6.81	9.69	8.71
West Virginia	8.41	6.13	7.13	6.62
Wisconsin	8.51	6.81	7.17	6.63
Wyoming	8.64	6.81	6.66	6.19

Source: Environmental Protection Agency (EPA)-U.S. Inventory of GHG Sources and Sinks 1990-2004 (2005), Annex 3 Table A -158 pg. A -186.

Table B.6. IPCC 2006 Methane Conversion Factors by Manure Management System Component/Methane Source 'S' [40]

MCF VALUES BY TEMPERATURE FOR MANURE MANAGEMENT SYSTEMS																					
System[a]		**MCFs by average annual temperature (°C)**																			**Source and comments**
		Cool					**Temperate**											**Warm**			
		≤ 10	**11**	**12**	**13**	**14**	**15**	**16**	**17**	**18**	**19**	**20**	**21**	**22**	**23**	**24**	**25**	**26**	**27**	**≥ 28**	
Pasture/Range/Paddock		1.0%					1.5%											2.0%			Judgment of IPCC Expert Group in combination with Hashimoto and Steed (1994).
Daily spread		0.1%					0.5%											1.0%			Hashimoto and Steed (1993).
Solid storage		2.0%					4.0%											5.0%			Judgment of IPCC Expert Group in combination with Amon et al. (2001), which shows emissions of approximately 2% in winter and 4% in summer. Warm climate is based on judgment of IPCC Expert Group and Amon et al. (1998).
Dry lot		1.0%					1.5%											2.0%			Judgment of IPCC Expert Group in combination with Hashimoto and Steed (1994).
Liquid / Slurry	With natural crust cover	10 %	11 %	13 %	14 %	15 %	17 %	18 %	20 %	22 %	24 %	26 %	29 %	31 %	34 %	37 %	41 %	44 %	48 %	50 %	Judgment of IPCC Expert Group in combination with Mangino et al. (2001) and Sommer (2000). The estimated reduction due to the crust cover (40%) is an annual average value based on a limited data set and can be highly variable dependent on temperature, rainfall, and composition.
	W/out natural crust cover	17 %	19 %	20 %	22 %	25 %	27 %	29 %	32 %	35 %	39 %	42 %	46 %	50 %	55 %	60 %	65 %	71 %	78 %	80 %	Judgment of IPCC Expert Group in combination with Mangino et al. (2001).

[40] From 2006 IPCC Guidelines for National Greenhouse Gas Inventories, Chapter 10: Emissions from Livestock and Manure Management, Table 10.17

Table B.6. Continued

MCF VALUES BY TEMPERATURE FOR MANURE MANAGEMENT SYSTEMS																					
System[a]		**MCFs by average annual temperature (°C)**																			**Source and comments**
		Cool					**Temperate**											**Warm**			
		≤ 10	**11**	**12**	**13**	**14**	**15**	**16**	**17**	**18**	**19**	**20**	**21**	**22**	**23**	**24**	**25**	**26**	**27**	**≥ 28**	
Uncovered anaerobic lagoon		66%	68%	70%	71%	73%	74%	75%	76%	77%	77%	78%	78%	78%	79%	79%	79%	79%	80%	80%	Judgment of IPCC Expert Group in combination with Mangino et al. (2001). Uncovered lagoon MCFs vary based on several factors, including temperature, retention time, and loss of volatile solids from the system (through removal of lagoon effluent and/or solids).
Pit storage below animal confinements	< 1 month	3%					3%											3%			Judgment of IPCC Expert Group in combination with Moller et al. (2004) and Zeeman (1994). Note that the ambient temperature, not the stable temperature is to be used for determining the climatic conditions.
	> 1 month	17%	19%	20%	22%	25%	27%	29%	32%	35%	39%	42%	46%	50%	55%	60%	65%	71%	78%	80%	Judgment of IPCC Expert Group in combination with Mangino et al. (2001). Note that the ambient temperature, not the stable temperature is to be used for determining the climatic conditions.

Table B.6. Continued

MCF VALUES BY TEMPERATURE FOR MANURE MANAGEMENT SYSTEMS																					
System[a]		**MCFs by average annual temperature (°C)**																			**Source and comments**
		Cool					**Temperate**											**Warm**			
		≤ 10	**11**	**12**	**13**	**14**	**15**	**16**	**17**	**18**	**19**	**20**	**21**	**22**	**23**	**24**	**25**	**26**	**27**	**≥ 28**	
Anaerobic digester		0-100%					0-100%											0-100%			Should be subdivided in different categories, considering amount of recovery of the biogas, flaring of the biogas and storage after digestion. Calculation with Formula 1.
Burned for fuel		10%					10%											10%			Judgment of IPCC Expert Group in combination with Safley et al. (1992).
Cattle and Swine deep bedding	< 1 month	3%					3%											30%			Judgment of IPCC Expert Group in combination with Moller et al. (2004). Expect emissions to be similar, and possibly greater, than pit storage, depending on organic content and moisture content.
Cattle and Swine deep bedding (cont.)	> 1 month	17%	19%	20%	22%	25%	27%	29%	32%	35%	39%	42%	46%	50%	55%	60%	65%	71%	78%	90%	Judgment of IPCC Expert Group in combination with Mangino et al. (2001).
Composting - In-vessel[b]		0.5%					0.5%											0.5%			Judgment of IPCC Expert Group and Amon et al. (1998). MCFs are less than half of solid storage. Not temperature dependant.
Composting - Static pile[b]		0.5%					0.5%											0.5%			Judgment of IPCC Expert Group and Amon et al. (1998). MCFs are less than half of solid storage. Not temperature dependant.

Table B.6. Continued

MCF VALUES BY TEMPERATURE FOR MANURE MANAGEMENT SYSTEMS				
Composting - Intensive windrow[b]	0.5%	1.0%	1.5%	Judgment of IPCC Expert Group and Amon et al. (1998). MCFs are slightly less than solid storage. Less temperature dependant.
Composting – Passive windrow[b]	0.5%	1.0%	1.5%	Judgment of IPCC Expert Group and Amon et al. (1998). MCFs are slightly less than solid storage. Less temperature dependant.
Aerobic treatment	0%	0%	0%	MCFs are near zero. Aerobic treatment can result in the accumulation of sludge which may be treated in other systems. Sludge requires removal and has large VS values. It is important to identify the next management process for the sludge and estimate the emissions from that management process if significant.

a Definitions for manure management systems are provided in Table B.1.
b Composting is the biological oxidation of a solid waste including manure usually with bedding or another organic carbon source typically at thermophilic temperatures produced by microbial heat production.

Table B.7. Biogas Destruction Efficiency Default Values by Destruction Device

If available, the official source tested methane destruction efficiency shall be used in place of the default methane destruction efficiency. Otherwise, project developers have the option to use either the default methane destruction efficiencies provided, or the site specific methane destruction efficiencies as provided by a state or local agency accredited source test service provider, for each of the combustion devices used in the project case performed on an annual basis.

Biogas Destruction Device	Biogas Destruction Efficiency (BDE)*
Open Flare	0.96[1]
Enclosed Flare	0.995[1,3]
Lean-burn Internal Combustion Engine	0.936[1,2]
Rich-burn Internal Combustion Engine	0.995[1,2]
Boiler	0.98[1]
Microturbine or large gas turbine	0.995[1]
Upgrade and use of gas as CNG/LNG fuel	0.95
Upgrade and injection into natural gas pipeline	0.98[4]

Source:
[1] IPCC 2006 Guidelines volume 4, chapter 10, p. 10.43.
[2] Seebold, J.G., et al., Reaction Efficiency of Industrial Flares, 2003
[3] The default destruction efficiencies for this source are based on a preliminary set of actual source test data provided by the Bay Area Air Quality Management District. The default destruction efficiency values are the lesser of the twenty fifth percentile of the data provided or 0.995. These default destruction efficiencies may be updated as more source test data is made available to the Reserve.
[4] The Revised 1996 IPCC Guidelines for National Greenhouse Gas Inventories gives a standard value for the fraction of carbon oxidized for gas destroyed of 99.5% (Reference Manual, Table 1.6, page 1.29). It also gives a value for emissions from processing, transmission and distribution of gas which would be a very conservative estimate for losses in the pipeline and for leakage at the end user (Reference Manual, Table 1.58, page 1.121). These emissions are given as 118,000kgCH4/PJ on the basis of gas consumption, which is 0.6%. Leakage in the residential and commercial sectors is stated to be 0 to 87,000kgCH4/PJ, which equates to 0.4%, and in industrial plants and power station the losses are 0 to 175,000kg/CH4/PJ, which is 0.8%. These leakage estimates are compounded and multiplied. The methane destruction efficiency for landfill gas injected into the natural gas transmission and distribution system can now be calculated as the product of these three efficiency factors, giving a total efficiency of (99.5% * 99.4% * 99.6%) 98.5% for residential and commercial sector users, and (99.5% * 99.4% * 99.2%) 98.1% for industrial plants and power stations.[41]

[41] GE AES Greenhouse Gas Services, Landfill Gas Methodology, Version 1.0 (July 2007).

Table B.8. CO_2 Emission Factors for Fossil Fuel Use

Fuel Type	Heat Content	Carbon Content (Per Unit Energy)	Fraction Oxidized	CO_2 Emission Factor (Per Unit Energy)	CO_2 Emission Factor (Per Unit Mass or Volume)
Coal and Coke	**MMBTU / Short ton**	**kg C / MMBTU**		**kg CO_2 / MMBTU**	**kg CO_2 / Short ton**
Anthracite Coal	25.09	28.26	1.00	103.62	2,599.83
Bituminous Coal	24.93	25.49	1.00	93.46	2,330.04
Sub-bituminous Coal	17.25	26.48	1.00	97.09	1,674.86
Lignite	14.21	26.30	1.00	96.43	1,370.32
Unspecified (Residential/ Commercial)	22.05	26.00	1.00	95.33	2,102.29
Unspecified (Industrial Coking)	26.27	25.56	1.00	93.72	2,462.12
Unspecified (Other Industrial)	22.05	25.63	1.00	93.98	2,072.19
Unspecified (Electric Utility)	19.95	25.76	1.00	94.45	1,884.53
Coke	24.80	31.00	1.00	113.67	2,818.93
Natural Gas (By Heat Content)	**BTU / Standard cubic foot**	**kg C / MMBTU**		**kg CO_2 / MMBTU**	**kg CO_2 / Standard ft^3**
975 to 1,000 Btu / Std cubic foot	975 – 1,000	14.73	1.00	54.01	Varies
1,000 to 1,025 Btu / Std cubic foot	1,000 – 1,025	14.43	1.00	52.91	Varies
1,025 to 1,050 Btu / Std cubic foot	1,025 – 1,050	14.47	1.00	53.06	Varies
1,050 to 1,075 Btu / Std cubic foot	1,050 – 1,075	14.58	1.00	53.46	Varies
1,075 to 1,100 Btu / Std cubic foot	1,075 – 1,100	14.65	1.00	53.72	Varies
Greater than 1,100 Btu / Std cubic foot	> 1,100	14.92	1.00	54.71	Varies
Weighted U.S. Average	1,029	14.47	1.00	53.06	0.0546
Petroleum Products	**MMBTU / Barrel**	**kg C / MMBTU**		**kg CO_2 / MMBTU**	**kg CO_2 / gallon**
Asphalt & Road Oil	6.636	20.62	1.00	75.61	11.95
Aviation Gasoline	5.048	18.87	1.00	69.19	8.32
Distillate Fuel Oil (#1, 2 & 4)	5.825	19.95	1.00	73.15	10.15
Jet Fuel	5.670	19.33	1.00	70.88	9.57
Kerosene	5.670	19.72	1.00	72.31	9.76
LPG (average for fuel use)	3.849	17.23	1.00	63.16	5.79
Propane	3.824	17.20	1.00	63.07	5.74
Ethane	2.916	16.25	1.00	59.58	4.14
Isobutene	4.162	17.75	1.00	65.08	6.45
n-Butane	4.328	17.72	1.00	64.97	6.70
Lubricants	6.065	20.24	1.00	74.21	10.72
Motor Gasoline	5.218	19.33	1.00	70.88	8.81
Residual Fuel Oil (#5 & 6)	6.287	21.49	1.00	78.80	11.80
Crude Oil	5.800	20.33	1.00	74.54	10.29
Naphtha (<401 deg. F)	5.248	18.14	1.00	66.51	8.31
Natural Gasoline	4.620	18.24	1.00	66.88	7.36
Other Oil (>401 deg. F)	5.825	19.95	1.00	73.15	10.15
Pentanes Plus	4.620	18.24	1.00	66.88	7.36
Petrochemical Feedstocks	5.428	19.37	1.00	71.02	9.18
Petroleum Coke	6.024	27.85	1.00	102.12	14.65
Still Gas	6.000	17.51	1.00	64.20	9.17
Special Naphtha	5.248	19.86	1.00	72.82	9.10
Unfinished Oils	5.825	20.33	1.00	74.54	10.34
Waxes	5.537	19.81	1.00	72.64	9.58

Source: EPA Climate Leaders, Stationary Combustion Guidance (2007), Table B-2 except:
Default CO_2 emission factors (per unit energy) are calculated as: Carbon Content × Fraction Oxidized × 44/12.
Default CO_2 emission factors (per unit mass or volume) are calculated as: Heat Content x Carbon Content × Fraction Oxidized × 44/12× Conversion Factor (if applicable). Heat content factors are based on higher heating values (HHV).

Table B.9. CO_2 Electricity Emission Factors

eGRID subregion acronym	eGRID subregion name	Annual output emission rates	
		(lb CO_2/MWh)	(metric ton CO_2/MWh)*
AKGD	ASCC Alaska Grid	1,232.36	0.559
AKMS	ASCC Miscellaneous	498.86	0.226
AZNM	WECC Southwest	1,311.05	0.595
CAMX	WECC California	724.12	0.328
ERCT	ERCOT All	1,324.35	0.601
FRCC	FRCC All	1,318.57	0.598
HIMS	HICC Miscellaneous	1,514.92	0.687
HIOA	HICC Oahu	1,811.98	0.822
MROE	MRO East	1,834.72	0.832
MROW	MRO West	1,821.84	0.826
NEWE	NPCC New England	927.68	0.421
NWPP	WECC Northwest	902.24	0.409
NYCW	NPCC NYC/Westchester	815.45	0.370
NYLI	NPCC Long Island	1,536.80	0.697
NYUP	NPCC Upstate NY	720.80	0.327
RFCE	RFC East	1,139.07	0.517
RFCM	RFC Michigan	1,563.28	0.709
RFCW	RFC West	1,537.82	0.698
RMPA	WECC Rockies	1,883.08	0.854
SPNO	SPP North	1,960.94	0.889
SPSO	SPP South	1,658.14	0.752
SRMV	SERC Mississippi Valley	1,019.74	0.463
SRMW	SERC Midwest	1,830.51	0.830
SRSO	SERC South	1,489.54	0.676
SRTV	SERC Tennessee Valley	1,510.44	0.685
SRVC	SERC Virginia/Carolina	1,134.88	0.515

Source: U.S. EPA eGRID2007, Version 1.1 Year 2005 GHG Annual Output Emission Rates (December 2008).
* Converted from lbs CO_2/MWh to metric tons CO_2/MWH using conversion factor 1 metric ton = 2,204.62 lbs.

Appendix C Summary of Performance Standard Development

The analysis to establish a performance standard for the Livestock Project Protocol was undertaken by Science Applications International Corporation (SAIC) and independent consultant Kathryn Bickel Goldman. It took place at the end of 2006. The analysis culminated in a paper that provided a performance standard recommendation to support the Reserve's protocol development process, which the Reserve has incorporated into the protocol's eligibility rules (see Section 3).

The purpose of a performance standard is to establish a threshold that is significantly better than average greenhouse gas (GHG) production for a specified service, which, if met or exceeded by a project developer, satisfies the criterion of "additionality." The Reserve's project protocol focuses on the following direct emission reduction activity: capturing and combusting methane from managing livestock manure. Therefore, in this case the methane emissions correspond to GHG production, and manure treatment/storage correspond to the specified service.

The analysis to establish the performance standard evaluated U.S.- and California-specific data on dairy and swine manure management systems. Ultimately, it recommended a practice-based/technology-specific GHG emissions performance standard – i.e. the installation of a manure digester (or BCS, more generally). The paper was composed of the following sections:

- The livestock industry in the U.S. and California
- Livestock manure management practices
- GHG emissions from livestock manure management
- Data on livestock manure management practices in the U.S. and California
- Current and anticipated regulations in California impacting manure management practices
- Recommendation for a performance threshold for livestock operations
- Considerations for baseline determinations

C.1 Overview of Data Collection

Conditions for methane generation exist under manure treatment and storage, namely anaerobic lagoons and/or storage ponds. The distribution of livestock across different sized operations can be an important criterion when developing a livestock manure management performance standard. There is a general relationship between manure management practices and operation size, where larger operations (in terms of livestock numbers) tend to use manure management systems that treat and store waste in liquid form (i.e. flush or scrape/slurry systems), particularly in dairy and swine operations.[42]

C.1.1 U.S. and California Livestock Population Data

The report presents data on livestock type and population in the U.S. It also describes the livestock industry in California in relation to U.S. operations. Table C.1 shows that California raises 16.5% of all dairy cows in the U.S. on only 3% of U.S. dairy operations, indicating that California has relatively few but substantially sized dairy operations.

[42] U.S. Inventory of Greenhouse Gas Emissions and Sinks: 1990-2004 (and earlier editions), US Environmental Protection Agency, Report # 430-R-06-002, April 2006.

Table C.1. Livestock Population Data for the U.S. and California, 2002

	U.S.		California			
	# Farms	# Animals	# Farms	# Animals	% of U.S. Farms	% of U.S. Animals
Dairy	91,989	17,013,361	2,793	2,806,357	3.0%	16.5%
Beef	796,436	34,431,060	12,497	879,582	1.6%	2.6%
Hogs	78,895	60,405,103	1,521	163,465	1.9%	0.3%

Source: U.S. Department of Agriculture National Agricultural Statistics Service (2004).

C.1.2 U.S. Data on Manure Management Practices

A data source to assess national-level manure management practices comes from the EPA Climate Leaders Draft Manure Offset Protocol (2006). It uses data on farm distribution and manure management systems from the Manure Management portion of the Inventory of U.S. Greenhouse Gas Emissions and Sinks: 1990 – 2004 and uses data on the number of farms by farm size and geographic location from the 2002 Census of Agriculture.

Information compiled for the EPA's U.S. GHG Inventory also provided the Climate Leaders protocol with a breakdown of the assumed predominant manure management systems in use for dairy and swine operations. Table C.2 and Table C.3 show data compiled for the systems in place in 2006.

Table C.2. Dairy and Swine Operations in the U.S. by Manure Management System

Animal	Number of Operations by Manure Management System						
	P/R/P	Anaerobic Digester	Lagoon	Liquid/ Slurry	Solid Storage	Deep Pit	Total
Dairy	72,487	62	4,453	4,345	9,494	1,147	91,989
Swine	53,230	18	6,571	6,303	1,129	11,643	78,894

Source: U.S. EPA Climate Leaders Draft Manure Offset Protocol (2006), Table I.A.

Table C.3. Dairy and Swine Operations by Size and Manure Management System

Animal	Number of Operations by Farm Size and Manure Management System							
	Farm Size	P/R/P	Anaerobic Digester	Lagoon	Liquid/ Slurry	Solid Storage	Deep Pit	Total
Dairy	≥500 head	320	48	1,614	675	245	-	2,902
	200-499	3,213	9	617	652	54	-	4,546
	1-199	6,8954	5	2,223	3,017	9,195	1,147	84,541
Swine	≥2000 head	-	14	2,581	1,084	297	2,774	6,749
	200-2000	-	3	3,990	5,219	832	8,869	18,913
	1-199	53,230	1	-	-	-	-	53,231

Source: U.S. 2002 Census of Agriculture.

The EPA Climate Leaders protocol focuses on the prevalence of anaerobic digesters for determining their performance threshold. Data on the implementation of anaerobic digesters at animal operations was taken from the Interim Draft Winter 2006 AgSTAR Digest. Of 91,988 dairy and 78,894 swine farm operations in the United States, a total of 80 anaerobic digesters are currently in operation: 62 (0.07%) for dairy manure and 18 (0.02%) for swine manure.

Data were also disaggregated in the Climate Leaders protocol to determine whether digester installation was a common practice in any animal production operation size range. As was shown in Table C.3, even at large animal production operations, very few digester systems are in place. At dairy farms with ≥500 head, only 1.7% of manure management systems include digesters, and of swine farms with >2000 head, only 0.2% have digesters.

Regarding swine operations, there are few large farms in California. As was noted previously, most swine in California (76%) are raised on only twelve operations with over 1,000 head each, while most farms with swine in California are very small and have less than 24 head. The majority of swine are then managed on large operations where the manure is very likely transported and stored in liquid form.

C.1.3 California Data on Manure Management Practices

The most comprehensive data source for California dairies comes from permit application data submitted to San Joaquin Valley (SJV) and South Coast (SC) Air Pollution Control Districts to meet air quality permit requirements. The data were provided by Applied GeoSolutions, which maintains a database of manure management practices from the permits.

The permit database includes information from 293 dairies housing approximately 1.2 million cows, which covers about 57% of California dairies with herds greater than 1,000 head. Most dairies (282) are in the San Joaquin Valley and the rest are in the South Coast.

Most permits from operators in the SJV report the use both freestall and drylot configurations (56%), a third report drylot only (33%), and a few report freestall only.[43] A single operator could choose more than one practice. The figures below show the percent of SJV and SC dairies, by dairy type, reporting the use of specific handling practices.

[43] Operators provided additional information on specific manure handling practices in the permit data.

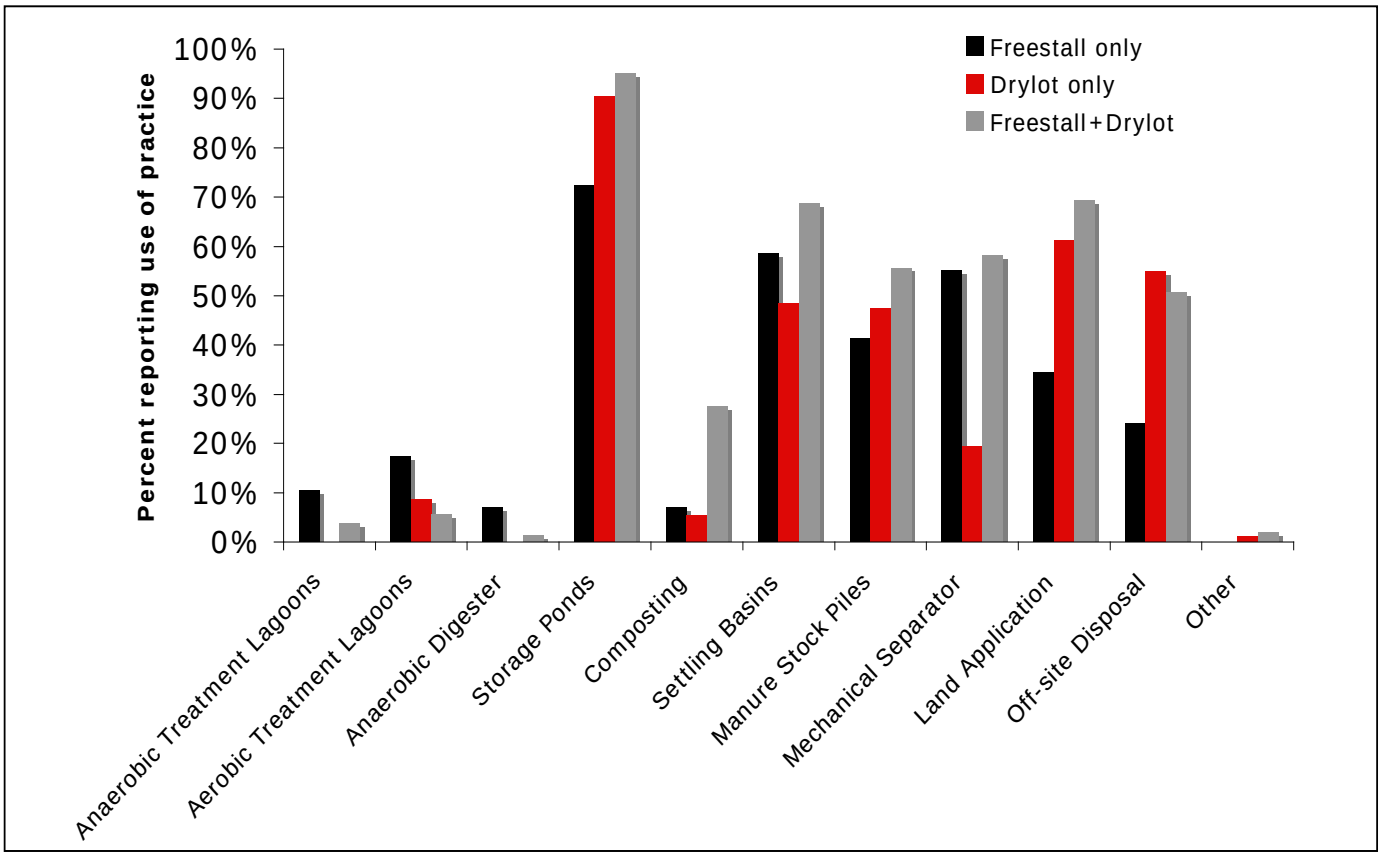

Figure C.1. Manure Handling Practices at SJV Dairies

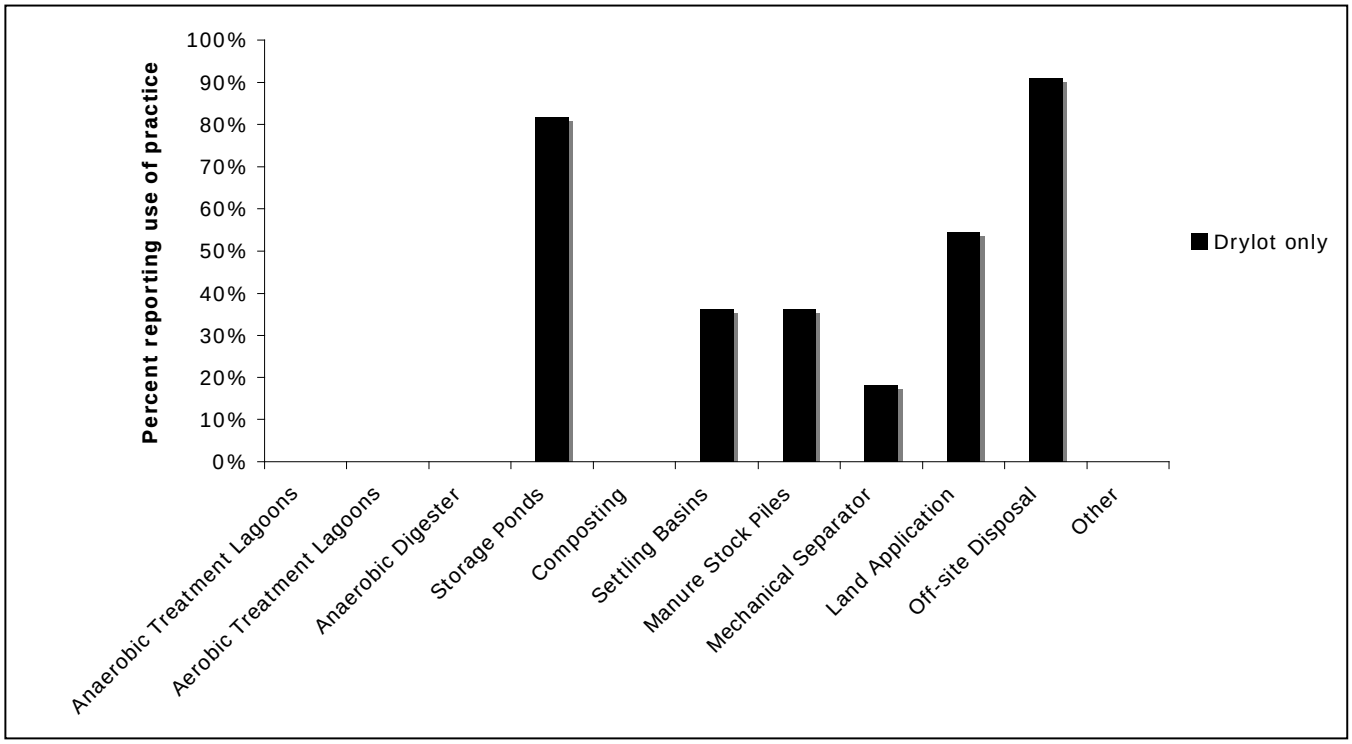

Figure C.2. Manure Handling Practices at SC Dairies

Based on the information contained in the San Joaquin Valley and South Coast permit database the report makes following key findings.

Liquid components:

- Most (91% of total) dairies report using storage ponds (fewer for freestall only operations because they are reporting their liquid storage in other categories, i.e. aerobic and anaerobic lagoons)
- Few (3% of total) report using anaerobic treatment lagoons (most are on freestall only operations)
- Few (8% of total) report using aerobic[44] treatment lagoons (most are on freestall only operations)
- Very few dairies (1% of total) report using anaerobic digesters (4 total, 2 on freestall only and 2 on freestall+drylot)

Dry components:

- Less than 10% of freestall only and drylot dairies, and less than 30% of freestall+drylot dairies use composting[45] (18% overall)
- Use of manure stockpiles ranges from ~40 to 55% (51% overall)
- 50-60% of freestall dairies (only and +drylot) use mechanical separation, compared to ~20% of drylots (45% overall)
- 50-70% use settling basins (more freestall and than drylots) (61% overall)

C.2 Current Digester Use in California

The report provides information from the EPA AgStar program, which offers technical support to livestock operators for installation and operation of anaerobic digesters. The Interim Draft Winter 2006 AgSTAR Digest states that there are 18 anaerobic digesters operating in California; only one is on a swine operation and the rest are on dairies. Eleven of the 17 dairy digesters are on operations with greater than 1,000 head. The uptake of digesters in California is less than 1% (0.6%) of the State's 2,793 dairies. And the 11 digesters operating on large dairies (>1000 dairy cows) calculates to 2.1% of this group (California has 517 dairies with more than 1000 cows – from the full report, Table 3, 'California Data on Livestock Operations, by Farm Size').

Additionally, the report considered the California Energy Commission's (CEC) 2006 Energy Action Plan, which states that a total of 14 projects have been approved for grants through 2005 totaling $5,792,370 under the Dairy Power Production Program (as of the end of 2006). It is unclear how many of these 14 digesters are currently operating and whether they are also captured in the AgStar database. Geographic information on the digester locations is available from a November 2004 map prepared by the CEC.[46] It shows 14 digester operations that convert methane to energy in the following air basins:

- SJV APCD – 8 digesters
- SCAQMD – 2 digesters
- BAAQMD – 1 digester
- South Central Coast (San Luis Obispo) – 1 digester
- San Diego Air Basin – 1 digester
- Mojave Desert Air Basin – 1 digester

[44] These are believed to be "red" or phototropic lagoons used for odor control and not true aerobic lagoons according to personal communication with Paul Sousa at the Western United Dairymen.
[45] Composting is predominantly, if not entirely, windrow composting as per Paul Sousa - WUD
[46] http://www.energy.ca.gov/pier/renewable/biomass/pier_biogas_projects_maps/index.html

C.3 Evaluation of Regulatory Requirements

The report evaluated recently passed regulations that affect the management of manure at dairies and at other livestock operations. The analysis included the San Joaquin Valley Air Pollution Control District's Rule 4570 adopted on June 15, 2006, which requires all large confined animal feeding operations (CAFs) to apply for permits and adopt various practices that will reduce volatile organic compounds, ammonia, and hydrogen sulfide emissions. The Sacramento Air Quality Management District adopted an almost identical rule – Rule 496 adopted August 24, 2006.

The report states that although the solid waste and liquid waste mitigation measures noted in Rule 4570 and Rule 496 could impact methane emissions, the rules are structured to allow large CAFs to select from a variety of control options – so there is no specific requirement for digesters to be installed. A summary of compliance options for Rule 4570 and Rule 496:

1. Non-permitted dairy below large CAF cutoff – drylot (continue current practice)
2. Non-permitted dairy below large CAF cutoff – freestall scrape (continue current practice)
3. Non-permitted dairy below large CAF cutoff – freestall flush (continue current practice)
4. Non-permitted swine farm below large CAF cutoff – continue current practice
5. Large CAF dairy – drylot – (assume pond converted to anaerobic lagoon or mechanical separator installed to comply with Rule 4570/496)
6. Large CAF dairy – freestall scrape (assume pond converted to anaerobic lagoon or mechanical separator installed to comply with Rule 4570/496)
7. Large CAF dairy – freestall flush (assume pond converted to anaerobic lagoon or mechanical separator installed to comply with Rule 4570/496)
8. Large CAF swine farm – assume pond converted to anaerobic lagoon or mechanical separator installed to comply with Rule 4570/496
9. New or modified large CAF– all categories (assume installation of anaerobic lagoon unless new BACT determination is made requiring digesters)

C.4 Performance Standard Recommendation

The report recommends that a performance standard apply to the control of methane emissions from dairy and swine livestock operations in the U.S. and California. In particular, the performance standard should be a technology-specific threshold that dairy or swine operators would meet. The threshold should be the installation of a BCS (anaerobic digester).

California serves as a good proxy for the U.S. regarding the level of digester use and the likelihood of its use as common practice. The data shows that California livestock operations (dairy, in particular) manage waste in a manner that is very suitable for digesters – i.e. liquid-based systems. Yet even in these favorable conditions digester are found on less than 1% of the dairies. The report concludes that if a dairy operator chooses to install a digester than the farmer would be managing waste in the 99th percentile. This constitutes above and beyond common practice.

Moreover, the main barrier inhibiting the installation and use of digesters is cost. EPA's AgStar program has developed cost curves indicating that for a 4000 cow dairy, the cost of a covered lagoon digester is approximately $1 million, and $1.2 million for a plug flow digester. AgStar estimated digester costs are considerably less for a 1000 cow dairy - approximately $250,000 for the covered lagoon and $450,000 for the plug flow digester – but the generated methane

volumes are proportionately less. A 2005 CEC study[47] showed that the cost of biogas recovered (after considering amortized capital costs) from 14 plug flow digesters in the U.S. averaged $10.05 per cubic foot. The costs of recovered biogas were even higher for complete mix digesters: over $11 per cubic foot for 3 systems in the U.S. and over $16 per cubic foot for systems in Denmark. These indicate non-commercial rates for gas recovered and that significant subsidies and/or incentives are needed to encourage additional digester installations.

[47] Commonwealth Energy Biogas/PV Mini-Grid Renewable Resources Program; "Making Renewables Part of an Affordable and Diverse Electric System in California;" Contract No. 500-00-036; Digester Comparison Study.

Appendix D Data Substitution

This appendix provides guidance on calculating emission reductions when data integrity has been compromised either due to missing data points or a failed calibration. No data substitution is permissible for equipment such as thermocouples which monitor the proper functioning of destruction devices. Rather, the methodologies presented below are to be used only for the methane concentration and flow metering parameters.

D.1 Missing Data

The Reserve expects that projects will have continuous, uninterrupted data for the entire verification period. However, the Reserve recognizes that unexpected events or occurrences may result in brief data gaps.

The following data substitution methodology may be used only for flow and methane concentration data gaps that are discrete, limited, non-chronic, and due to unforeseen circumstances. Data substitution can only be applied to methane concentration *or* flow readings, but not both simultaneously. If data is missing for both parameters, no reductions can be credited.

Further, substitution may only occur when two other monitored parameters corroborate proper functioning of the destruction device and system operation within normal ranges. These two parameters must be demonstrated as follows:

1. Proper functioning can be evidenced by thermocouple readings for flares, energy output for engines, etc.
2. For methane concentration substitution, flow rates during the data gap must be consistent with normal operation.
3. For flow substitution, methane concentration rates during the data gap must be consistent with normal operations.

If corroborating parameters fail to demonstrate any of these requirements, no substitution may be employed. If the requirements above can be met, the following substitution methodology maybe applied:

Duration of Missing Data	Substitution Methodology
Less than six hours	Use the average of the four hours immediately before and following the outage
Six to 24 hours	Use the 90% lower or upper confidence limit of the 24 hours prior to and after the outage, whichever results in greater conservativeness
One to seven days	Use the 95% lower or upper confidence limit of the 72 hours prior to and after the outage, whichever results in greater conservativeness
Greater than one week	No data may be substituted and no credits may be generated

Note: It is conservative to use the upper confidence limit when calculating emissions from the BCS (Equation 5.6); however it is conservative to use the lower confidence limit when calculating the total amount of methane that is destroyed in the BCS Equation 5.10.