Livestock
Project Reporting Protocol

Capturing and destroying methane from manure management systems

Version 2.0

August 12, 2008

The Climate Action Reserve

Livestock Project Reporting Protocol

Capturing and destroying methane from manure management systems

TABLE OF CONTENTS

I. Introduction 1
  I.1 Document organization 1
II. The GHG Reduction Project 2
  II.1 Project definition 2
  II.2 The project developer 3
  II.3 Additional manure management GHG reduction activities 3
III. Eligibility Rules 3
  III.1 Additionality 3
  III.2 Location 5
  III.3 Project start date 5
IV. The GHG Assessment Boundary 5
  IV.1 GHG source categories for manure management systems 5
  IV.2 Methane and carbon dioxide 6
V. GHG Reductions Calculation Methods 10
  V.1 Modeled Baseline Methane Emissions 11
  V.2 Modeled Baseline Methane Emissions Equations 11
  V.3 Project Methane Emissions 16
  V.4 Project Methane Emissions Equations 16
  V.5 Metered Methane Destruction Comparison 20
  V.6 Carbon Dioxide Emissions 21
VI. Project Monitoring 23
VII. Reporting Parameters 31
  VII.1 Project submittal documentation 31
  VII.2 Record Keeping 32
  VII.3 Reporting cycle 32
  VII.4 Project crediting period 33
  VII.5 Non-Climate Action Reserve reporting 33
VIII. Glossary of Terms 33
IX. References 36
Appendix A – Associated Environmental Impacts 38
Appendix B – Emission Factor Tables 39
Appendix C – Summary of the Performance Standard Paper 51
  Overview of data collection 51
  Performance Standard Recommendation 57
Appendix D – Livestock Project Submittal Forms 58

I. Introduction

The Climate Action Reserve's (Reserve) Livestock Project Reporting Protocol – for capturing and destroying biogas in a manure management system – provides guidance to account for and report greenhouse gas (GHG) emissions reductions associated with installing a manure biogas control system for livestock operations, such as dairy cattle and swine farms. The protocol focuses on quantifying the change in methane emissions, but also accounts for effects on carbon dioxide emissions.

Established by the California Legislature in 2000 as a non-profit, public/private partnership, the California Registry runs a voluntary GHG registry. Its purpose is to promote and facilitate the measurement, monitoring and reduction of GHG emissions. Participants in the program account for and certify their GHG emissions according to the Reserve's protocols.

Project developers that install manure biogas capture and destruction technologies use this document to register GHG reductions with the Reserve. The protocol provides eligibility rules, methods to calculate reductions, performance-monitoring instructions, and procedures for reporting project information to the Reserve. Additionally, all project reports receive annual, independent verification by Reserve-approved verifiers. Guidance for verifiers to verify reductions is provided in the corresponding Livestock Project Verification Protocol.

This project protocol facilitates the creation of GHG emissions reductions determined in a complete, consistent, transparent, accurate, and conservative manner, while incorporating relevant sources.[1]

I.1 Document organization

The Reserve's manure management project protocol has the following sections:

- The GHG Reduction Project
- Project Eligibility
- The GHG Assessment Boundary
- GHG Reduction Calculation Methods
- Project Monitoring
- Reporting Parameters

Regarding associated environmental impacts related to installing a biogas control system, such as air and water quality issues, the Reserve discusses these potential concerns in Appendix A. Project developers that follow the guidance in this protocol and register GHG reductions with the Reserve must comply with all local, state, and national air and water quality regulations.

Recommendations for taking an entity-level GHG emissions inventory are provided in Appendix D, which augment the guidance in the California Registry's General Reporting Protocol (GRP). To register GHG reductions with the Reserve, project developers are not required to take an annual entity-level GHG inventory of their livestock operation.

[1] See the WRI/WBCSD GHG Protocol for Project Accounting (Part I, Chapter 4) for a description of GHG accounting principles.

II. The GHG Reduction Project

Manure treated and stored under anaerobic conditions decomposes to produce methane, which, if uncontrolled, is emitted to the atmosphere. This predominantly occurs when livestock operations manage waste with liquid-based systems (e.g. in lagoons, ponds, tanks, or pits). Within the livestock sector, the primary drivers of methane generation include the amount of manure produced and the fraction of volatile solids that decompose anaerobically. Temperature and the retention time of manure during treatment and storage also affect its production. A biogas control system captures and destroys methane gas created as a result of manure management.

II.1 Project definition

For the purpose of this protocol, the GHG reduction project is the installation of a biogas control system[2] that captures and destroys methane gas from manure treatment and/or storage facilities on livestock operations and that commences operation on or after January 1, 2001. Captured biogas could be destroyed on-site, or transported for off-site use (e.g. through gas distribution or transmission pipeline), or used to power vehicles. Regardless of how project developers take advantage of the captured biogas, the ultimate fate of the methane must be destruction. “Centralized digesters” that integrate waste from more than one livestock operation also meet this definition of the GHG reduction project.[3]

The biogas control system destroys methane associated with the management of livestock waste that would have otherwise been generated through uncontrolled, anaerobic manure treatment and/or storage and emitted to the atmosphere.

Consistent with CDM methodology ACM0010 (V2 p.2), project developers must demonstrate that the depth of their anaerobic ponds/lagoons pre-project were sufficient to prevent algal oxygen production and create an oxygen-free bottom layer; which usually means at least 1 meter depth. Ultimately, to generate methane emissions anaerobic systems should be designed and maintained with sufficient volume to properly treat volatile solids and prevent solids from accumulating, to the extent that they adversely impact the treatment zone. Additional information on the design and maintenance of anaerobic manure storage/treatment systems is available through USDA NRCS Standards.[4]

In addition to reducing methane, the installation of a biogas control system could impact carbon dioxide and nitrous oxide emissions associated with manure collection, transport, storage, treatment, and disposal. The effect could either increase or decrease these GHG emissions, depending on the project’s particular circumstance. These system-related effects are secondary to the primary effect of the project (reducing methane emissions). Section IV, The GHG Assessment Boundary, delineates the scope of the accounting framework.

[2] Biogas control systems are commonly called digesters, which may be designed and operated in a variety of ways, from ambient temperature covered lagoons to heated lagoons to mesophilic plug flow or complete mix concrete tank digesters.

[3] The protocol also does not preclude project developers from co-digesting organic matter in the biogas control system. However, the additional organics could impact the nutrient properties of digester effluent, which project developers should consider when assessing the project’s associated water quality impacts.

[4] See U.S. Department of Agriculture Natural Resources Conservation Service, Conservation Practice Standard, Waste Storage Facility, No. 313; and U.S. Department of Agriculture Natural Resources Conservation Service, Conservation Practice Standard, Waste Treatment Lagoon, No. 359.

II.2 The project developer

Project developers could be livestock owners and operators, such as dairy cattle, beef cattle, or swine farmers. However, they could also include other entities, such as third-party aggregators. Ownership of the GHG reductions should be established by clear and explicit title.

II.3 Additional manure management GHG reduction activities

The Reserve recognizes that project developers could implement a variety of GHG reduction activities at a livestock operation, which are complex interrelated systems that make use of several types and combinations of manure management practices. Installing technology to capture and destroy methane from waste storage and/or treatment systems is but one of many projects that could occur at a livestock operation. Several options to modify solid and/or liquid manure management practices that do not involve a biogas control system – i.e. a digester – could also reduce methane, carbon dioxide, and nitrous oxide emissions (including land application). And a project developer could also change dietary regimes to reduce methane (either enteric fermentation or waste management-related) and nitrous oxide.

However, at this time, GHG reduction activities not associated with installing a biogas control system do not meet this protocol's definition of the GHG reduction project. Furthermore, producing power for the electricity grid (and thus displacing fossil-fueled power plant GHG emissions) is a complementary and separate GHG project activity to destroying methane gas from waste treatment/storage, and is not included within this protocol's accounting framework.

The Reserve anticipates augmenting this document to incorporate GHG reductions associated with manure management and livestock operations beyond methane destruction from biogas control systems. Indeed, the GHG assessment boundary and GHG reduction calculation approach are designed to support such amendments. And, more broadly, new protocols may also be developed in the future to facilitate reduction opportunities in the agriculture sector (as well as other sectors).

III. Eligibility Rules

Project developers using this protocol satisfy the following eligibility rules to register reductions with the Reserve. The criteria only apply to projects that meet the definition of a GHG reduction project.

Eligibility Rule I:	Additionality	→	*Meet performance standard*
		→	*Exceed regulatory requirements*
Eligibility Rule II:	Location	→	*U.S. farms*
Eligibility Rule III:	Project Start Date	→	*January 1, 2001*

III.1 Additionality

The Reserve strives to support only projects that yield surplus GHG reductions, which are additional to what might have otherwise occurred. That is, the reductions are above and beyond business-as-usual – the baseline case.

Project developers satisfy the "additionality" eligibility rule by passing two tests:

1. The Performance Standard Test, and
2. The Regulatory Test.

The Performance Standard Test. Project developers pass the Performance Standard Test by meeting a program-wide performance threshold – i.e. a standard of performance applicable to all manure management projects, established on an ex-ante basis. The performance threshold represents "better than business-as-usual." If the project meets the threshold, then it exceeds what would happen under the business-as-usual scenario and generates surplus/additional GHG reductions.

For this protocol, the Reserve uses a technology-specific threshold; sometimes also referred to as a practice-based threshold, where it serves as "best-practice standard" for managing livestock manure. By installing a biogas control system a project developer passes the Performance Standard Test.

The Reserve defined this Performance Standard by evaluating manure management practices in California and the U.S. A summary of the study to establish the threshold is provided in Appendix C.

The Reserve will periodically re-evaluate the appropriateness of the Performance Standard. All projects that pass this test are eligible to register reductions with the Reserve for the lifetime of the project-crediting period, even if the Performance Standard Test changes during mid-period. As stated in Section VII, Reporting Parameters, the project-crediting period is ten years.

The Regulatory Test. The Reserve's analysis of manure management practices in the U.S. identified no regulations that obligate livestock owners to invest in a manure biogas control system. The analysis looked most closely at recent, stringent California air quality regulations (e.g., SJVAPCD Rule 4570 and Sacramento AQMD Rule 496), and found that installing an anaerobic digester is one of several compliance options, although high capital costs appear to prohibit the use of anaerobic digesters as a practical compliance mechanism for these air quality regulations

Although the Reserve found no regulations driving livestock operators to install a biogas control system, project developers pass the Regulatory Test by demonstrating that the preliminary determination from the analysis of manure management practices in the U.S. continues to hold true for their region. That is, project developers show that there are no state or federal regulations or local agency ordinances/rulings requiring the installation of a biogas control system. Project developers are required to submit a signed attestation of title document that includes an attestation that the project has not been required to be implemented by any law, statute, regulation, court order, environmental mitigation or other mandate. All projects that pass this test are eligible to register reductions with the Reserve for the lifetime of the project-crediting period (ten years), even if a regulatory agency with authority over a livestock operation passes a rule obligating the installation of a biogas control system during mid-period.

Additionally, project developers pass the Reserve's Regulatory Test by demonstrating that the project meets local air and water quality regulations. Projects that do not comply with air and water quality regulations are not eligible to register GHG reductions with the Reserve.

III.2 Location

All projects located at livestock operations in the U.S. are eligible to register reductions with the Reserve. The scope of the analysis of manure management practices that formed the basis of the Performance Standard covered livestock operations in California and the U.S. Therefore, the Reserve will treat GHG reductions from all U.S.-based projects that follow the guidance in this protocol equally.

The Reserve anticipates that this protocol could be applicable internationally. The calculation procedure is consistent with international practices and, considering its rigor, the Performance Standard could apply to regions outside of the U.S. However, at this time, reductions from international projects are not eligible to be registered with the Reserve.

III.3 Project start date

California Senate Bill 1771 (Sher) created the California Registry in September of 2000 to serve as a platform to record and register GHG reduction activities, among other things. This sent a signal to GHG-emitting entities, including farmers, that project activities could receive recognition for their carbon value. The establishment of the California Registry to support GHG reduction activities is the basis for the project start date criterion.

All GHG reduction projects that install a biogas control system are eligible to register reductions with the Reserve if the system started operating on or after January 1, 2001. Projects that began operating before January 1, 2001 are not eligible to register reductions according to this protocol. For the Reserve's purpose, the commencement of operation means a constructed system that is capturing and destroying methane gas from the treatment and/or storage of the project developer's livestock waste.

IV. The GHG Assessment Boundary

The GHG assessment boundary delineates the GHG sources and gases assessed by project developers to determine the net change in emissions associated with installing a biogas control system. This protocol's assessmentt boundary captures sources from waste production to disposal, including off-site manure disposal. However, the calculation procedure only incorporates methane and carbon dioxide, so while nitrous oxide sources are technically within the boundary they are not assessed in the calculation procedure.

IV.1 GHG source categories for manure management systems

A farm's manure management system is dictated by site-specific conditions. The design and physical layout of a particular operation will influence its make-up of GHG sources and types of gases. However, regardless of a livestock operation's individual characteristics, modifying its manure management system (e.g. installing a biogas control system) can increase or decrease GHG emissions from sources grouped under three broad source categories:

- Waste production,
- Waste treatment and storage, and
- Waste disposal.

Figure 1: Schematic of the Manure Management GHG Assessment Boundary

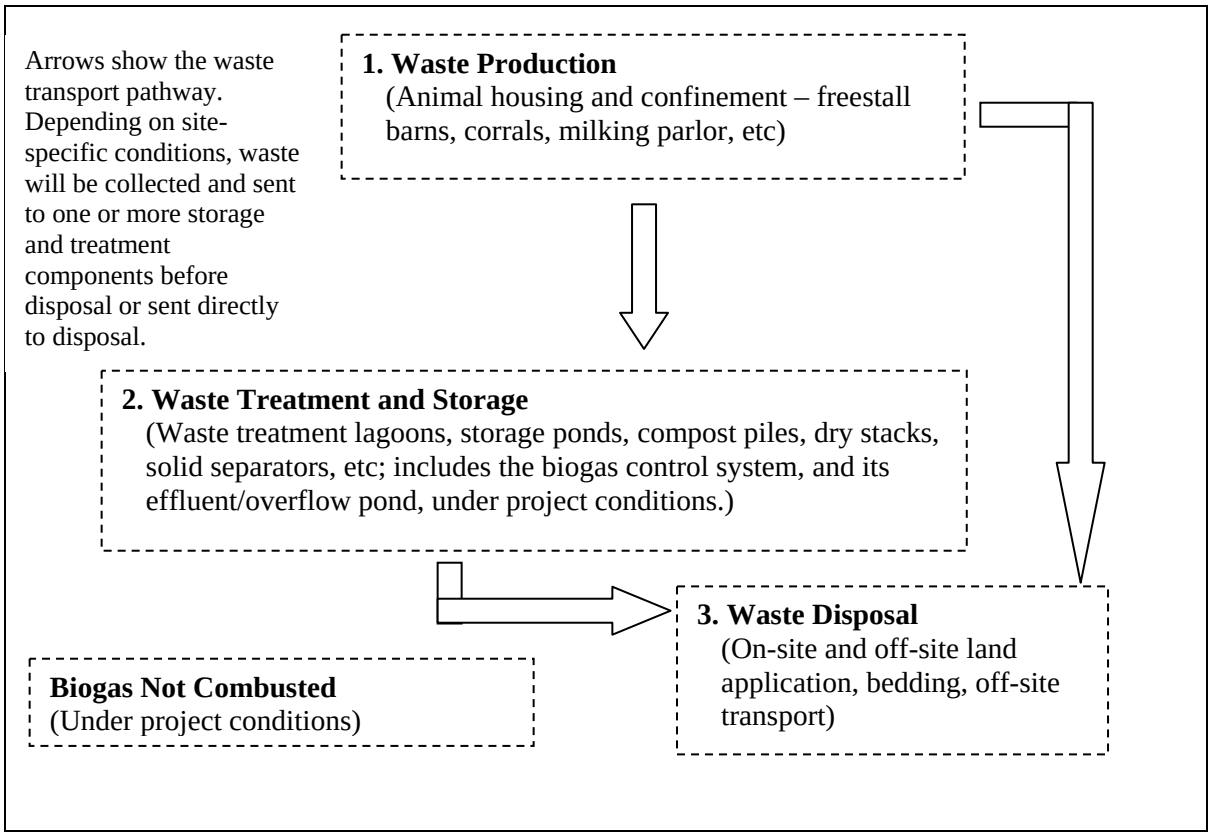

Figure 1 provides a general illustration of the assessment boundary; it encompasses the full manure management system (and includes GHG emissions from the biogas control system).

For the most part, the installation of a biogas control system will not alter emissions from the waste production area; however, in some cases, carbon dioxide emissions could change from the support equipment. The project will primarily result in a change of methane emissions from the waste treatment and storage area. Sources of emissions in the waste collection and transport and waste disposal areas could also be affected by the project.

IV.2 Methane and carbon dioxide

At this time, only two gases within the GHG assessment boundary are quantified to assess the project's impact:

- Methane
- Carbon dioxide

Methane. In most cases, the primary impact of installing a biogas control system corresponds with reductions of methane emissions associated with anaerobic decomposition of manure in

the waste treatment and storage category.[5] The GHG reduction calculation procedure focuses on methane, as it will likely constitute the bulk of a project's reductions.

Carbon dioxide. In addition to methane, this protocol accounts for changes in direct carbon dioxide emissions from mobile and stationary combustion sources within the assessment boundary, which can either increase or decrease depending on project and farm specifics.[6] For example, methane gas captured in a biogas control system could be used in place of fossil fuels to power on-site stationary combustion devices, such as generators or pumping systems, or the project could alter the need to transport manure waste for off-site disposal.

Carbon dioxide emissions from biogas control systems are considered biogenic emissions (as opposed to anthropogenic) and will not be included in the GHG reduction calculation – per the Intergovernmental Panel on Climate Change's (IPCC) guidelines for captured landfill gas.[7]

Sources of carbon dioxide within the manure management system might not change as a result of the project or could be insignificant. Therefore, project developers may conduct an assessment to determine if carbon dioxide emissions are considered de minimis. Project developers are only required to calculate and document fuel use for annual carbon dioxide emissions if project carbon dioxide emissions show a variance greater than 5% of total baseline emissions. If project carbon dioxide emissions are found to be within 5% of total baseline emissions, then the project developer may use a best estimate technique to estimate carbon dioxide emissions. Whether the fuel records are documented or estimated, carbon dioxide emissions must be verified and reported to the Reserve annually.[8]

The protocol does not account for carbon dioxide reductions associated with displacing grid-delivered electricity. This is classified as an indirect emissions reduction activity because the change in GHGs occurs from sources owned and controlled by the power producer, even though the project developer produces the renewable electricity that displaces the fossil-based electricity. Capturing and using methane to produce electricity for the grid would be defined as a complimentary and separate GHG reduction project.

In a separate development process, the Reserve would establish a project protocol for all grid-delivered renewable energy projects, applicable to indirect emissions reductions from using biogas from biogas control systems.

Box 1: The Registry's treatment of nitrous oxide emissions

[5] Generally, the secondary impacts of a project correspond with supplemental GHG effects to the main reduction activity. They could have a minor or major effect on the project's reductions (either in a positive or negative direction)and in some cases they are unintentional. See also the WBCSD/WRI "GHG Protocol for Project Accounting" for a discussion of primary and secondary GHG effects.

[6] Methane and nitrous oxide emissions from mobile and stationary combustion sources are not calculated.

[7] *IPCC Good Practice Guidance and Uncertainty Management in National Greenhouse Gas Inventories*; p.5.10, ftnt 4. The rationale is that carbon dioxide emitted during combustion represents the carbon dioxide that would have been emitted during natural decomposition of the manure. Emissions from the biogas control system do not yield a net increase in atmospheric carbon dioxide because they are theoretically equivalent to the carbon dioxide absorbed during plant/feed growth.

[8] This is consistent with guidance in the Registry's GRP and WRI's GHG Project Protocol regarding the treatment of significant secondary effects.

This protocol's GHG assessment boundary conceptually encompasses sources of nitrous oxide emissions in the waste production, waste treatment and storage, and waste disposal source categories. However, project developers do not calculate nitrous oxide impacts. This determination is made for the sake of "conservativeness" since the high levels of uncertainty associated with the methods to assess nitrous oxide production could lead to overestimations of project reductions.

Procedures to calculate nitrous oxide emissions associated with a livestock operation's manure management system and from the application of manure to soils (both direct and indirect) rely on emission factors with at least an uncertainty range of a factor of two – either 100% above or 50% below the default value.[9] The reason for the large uncertainty is the complex emissions pathway from organic nitrogen in livestock waste to nitrous oxide – the nitrification-denitrification cycle.[10]

As the state of science advances and methods to calculate nitrous oxide emissions at the farm-level improve, the Registry will incorporate them into this protocol. In fact, as the assessment boundary includes sources from waste production to disposal it is set-up to integrate nitrous oxide calculations. The Registry will work with project developers and the research community to develop an appropriate "conservatism factor" that could sufficiently mitigate possible overestimations of project reductions that stem from uncertainty in nitrous oxide quantification.

This approach is consistent with the Regional Greenhouse Gas Initiative's (RGGI) treatment of nitrous oxide. Under the RGGI Model Rule (January 5, 2007) project developers do not receive credit for reductions in nitrous oxide. The CDM "Consolidated baseline methodology for GHG emission reductions from manure management systems" (ACM0010 V.2) and the U.S. EPA Climate Leaders, Draft Manure Offset Protocol (October 2006) on the other hand allow project developers to calculate decreases in nitrous oxide emissions from sources up to, but excluding, land application.

Table 1 relates GHG source categories to sources and gases, and indicates inclusion in the calculation methodology. It is intended to be illustrative – GHG sources are indicative for the source category, GHGs in addition to the main GHG are also mentioned, where appropriate.

[9] See IPCC 2006 Guidelines volume 4, chapter 10, table 10.21 and volume 4, chapter 11, table 11.3.

[10] Uncertainty also exists with estimations of baseline methane emission. The Registry takes steps to reduce this uncertainty by following a calculation approach that is based on the monthly biological performance of the operation's anaerobic manure handling systems that existed pre-project, as predicted by the van't Hoff-Arrhenius equation using site-specific data on temperature, Volatile Solids (VS) loading, and system VS retention time. Furthermore, all existing estimates of uncertainty (of which the Registry is aware) involve the quantification of nitrous oxide at a national level, not a project-level. The Registry has been working to evaluate project-level uncertainty. This work is ongoing, but early results suggest that uncertainty levels associated with the quantification of nitrous oxide are more substantial than methane.

Table 1: Manure management source categories, GHG sources, associated gases, and coverage in the manure management GHG assessment boundary

GHG Source Category	GHG Source	Associated GHGs*	Included in GHG assessment boundary
Waste Production (animal housing and confinement)	• Enteric fermentation	Methane	➢ *Not included* (no change due to project)[11]
	• Waste deposits barn, milking parlor, or pasture/corral	Nitrous oxide	➢ *Not Included*
	• Support equipment	Carbon dioxide	➢ *Included*
Waste Collection and Transport	• Emissions from mechanical systems used to collect and transport waste (e.g., engines and pumps for flush systems; vacuums and tractors for scrape systems)	Carbon dioxide	➢ *Included*
	• Vehicle emissions (e.g., for centralized digesters)	Carbon dioxide	➢ *Included*
Waste Treatment and Storage	• Dry lot deposits	Methane Nitrous oxide	➢ *Included* ➢ *Not Included*
	• Compost piles	Methane Nitrous oxide	➢ *Included* ➢ *Not Included*
	• Solid storage piles	Methane Nitrous oxide	➢ *Included* ➢ *Not Included*
	• Manure settling basins	Methane Nitrous oxide	➢ *Included* ➢ *Not Included*
	• Anaerobic lagoons	Methane Nitrous oxide	➢ *Included* ➢ *Not Included*
	• Aerobic treatment	Carbon dioxide (from aeration equipment)	➢ *Included*
	• Storage ponds	Methane Nitrous oxide	➢ *Included* ➢ *Not Included*
	• Support equipment	Carbon dioxide	➢ *Included*
Waste Disposal	• Land application	Nitrous oxide	➢ *Not Included*
	• Vehicle emissions (for land application and/or offsite transport)	Carbon dioxide	➢ *Included*
Biogas controls system	• Uncombusted or leaked gas • Biogas combustion • Grid-electricity	Methane Carbon dioxide Carbon dioxide	➢ *Included* ➢ *Not Included* ➢ *Not Included*

* Nitrous oxide emissions could stand for either direct, indirect or both

[11] A livestock operator could change its feeding strategy to maximize biogas production from a digester; thus impacting enteric fermentation emissions from ruminant animals. However, this is an unlikely scenario. Project developers should disclose whether their feeding regimes change to optimize biogas production. If this occurs, the Registry will work with them to incorporate these emissions into the calculation procedure.

V. GHG Reductions Calculation Methods

The Reserve's GHG reduction calculation method is derived from the Kyoto Protocol's Clean Development Mechanism (ACM0010 V.2), the EPA's Climate Leaders Program (Draft Manure Management Offset Protocol, October 2006), and the RGGI Model Rule (January, 5 2007).

Total GHG reductions are registered on an annual basis, thus projects will have yearly baseline and project (actual) emissions. But project developers should take note that some equations to calculate baseline and project emissions are run on a month-by-month basis and activity data monitoring have varying levels of frequency. As applicable, monthly baseline emissions are summed together as well as monthly project emissions for the annual comparison.

To support project developers and facilitate consistent and complete emissions reporting, the Reserve has developed an Excel based calculation tool available at: http://www.climateregistry.org/tools/protocols/project-protocols.html. The Reserve *recommends* the use of the Livestock Calculation Tool for all project calculations and emission reduction reports.

Models that estimate biological and physical processes, such as the nitrogen and carbon cycles in soils and biological waste streams, are becoming increasingly available. Process models typically rely on a series of input data that research has shown to be important drivers of the geochemical process. In terms of GHG emissions models, process models identify the mathematical relationships between inputs, basic conditions, and GHG emissions. At this time, biogeochemical models to assess carbon and nitrogen cycling from waste management systems are under development. As these new modeling methods become widely accepted and available, the Reserve will consider updating the protocol to incorporate these new approaches into the quantification methodologies.

The current methodology for quantifying the GHG impact associated with installing a biogas control system requires the use of both modeled reductions (following equations 2a - 2c and 3a - 3c) as well as the utilization of ex-post metered data from the biogas control system to be used as a check on the modeled reductions.

The Reserve recognizes that there can be material differences between modeled methane emission reductions and the actual metered quantity of methane that is captured and destroyed by the biogas control system due to digester start-up periods, venting events, and other biogas control system operational issues. These operational issues have the potential to result in substantially less methane destruction than is modeled, leading to an overestimation of GHG reductions in the modeled case.

To address this issue and maintain consistency with international best practice, the Reserve requires the modeled methane emission reduction results to be compared to the ex-post metered quantity of methane that is captured and destroyed by the biogas control system. The lesser of the two values will represent the total methane emission reductions for the reporting period. Equation 1 below outlines the quantification approach for calculating the emission reductions from the installation of a biogas control system. [12]

[12] The calculation procedure only addresses direct emissions sources and does not incorporate changes in electricity consumption, which impacts indirect emissions associated with power plants owned and operated by entities other than the livestock operator.

Equation 1: GHG reductions from installing a biogas control system

$$\text{Total GHG Reductions} = (\text{Modeled baseline emissions}_{CH4} - \text{Project emissions}_{CH4}) + (\text{Baseline emissions}_{CO2} - \text{Project emissions}_{CO2})$$

The (*Modeled baseline emissions* $_{CH4,}$ – *Project emissions* $_{CH4}$) term shall be calculated according to equations 2a - 2c and equations 3a - 3c. The resulting aggregated quantity of methane reductions must then be compared to the ex-post quantity of methane that is metered and destroyed in the biogas collection system, as expressed in equation 4. In the case that the total ex-post quantity of metered and destroyed methane is less than the modeled methane reductions, the metered quantity of destroyed methane will replace the modeled methane reductions.

Therefore, the above equation then becomes:

$$\text{Total GHG Reductions} = (\text{Total quantity of metered and destroyed methane}) + (\text{Baseline emissions}_{CO2} - \text{Project emissions}_{CO2})$$

V.1 Modeled Baseline Methane Emissions

Baseline emissions represent the GHG emissions within the GHG assessment boundary that would have occurred if not for the installation of the biogas control system.[13] For the purposes of this protocol, project developers calculate their baseline emissions according to the manure management system in place prior to installing the biogas control system. This is referred to as a "continuation of current practices" baseline scenario. Additionally, project developers calculate baseline emissions each year of the project.[14] The procedure assumes there is no biogas control system in the baseline system. Regarding new livestock operations that install a biogas control system, project developers establish a modeled baseline scenario using the prevailing system type in use for the geographic area, animal type, and farm size that corresponds to their operation.

Modeled baseline methane emissions. The procedure to determine the modeled baseline methane emissions follows Equation 2a, which combines Equation 2b and 2c.

Equation 2b calculates methane emissions from anaerobic manure storage/treatment systems based on site-specific information on the mass of volatile solids degraded by the anaerobic storage/treatment system and available for methane conversion.[15] It incorporates the effects of temperature through the van't Hoff-Arrhenius (*'f'* factor) and accounts for the retention of volatile solids through the use of monthly assessments. Equation 2c is less intensive and applies to non-anaerobic storage/treatment systems. Both Equation 2b and 2c reflect basic biological principles of methane production from available volatile solids, determine methane generation for each livestock category, and account for the extent to which the waste management system handles each category's manure.

V.2 Modeled Baseline Methane Emissions Equations

Equation 2a: Modeled baseline methane emissions

[13] The Reserve is working on developing guidance for the accounting of co-digestion activities. Co-digestion guidance should be published by early 2009.

[14] Conversely, under a "static baseline," a project developer would assess baseline emissions once before project implementation and use that value throughout the project lifetime.

[15] Anaerobic storage/treatment systems generally refer to anaerobic lagoons, or storage ponds, etc.

$$BE_{CH4} = \left(\sum_{S,L} BE_{CH4,AS,L} + BE_{CH4,non-AS,L} \right)$$

Where,

BE_{CH4}	=	total annual baseline methane emissions, expressed in carbon dioxide equivalent (tCO_2e/yr)
$BE_{CH4,AS,L}$	=	total annual baseline methane emissions from anaerobic storage/treatment systems by livestock category 'L', expressed in carbon dioxide equivalent (tCO_2e/yr)
$BE_{CH4,non-AS,L}$	=	total annual baseline methane emissions from non-anaerobic storage/treatment systems, expressed in carbon dioxide equivalent (tCO_2e/yr)

Equation 2b: Modeled baseline methane emissions from anaerobic storage/treatment systems

$$BE_{CH4,AS} = \sum_{L,AS} VS_{deg,AS,L} \times B_{0,L} \times 0.67 \times 0.001 \times 21$$

Where,

$BE_{CH4,AS}$	=	total annual baseline methane emissions from anaerobic manure storage/treatment systems, expressed in carbon dioxide equivalent (tCO_2e/yr)
$VS_{deg,AS,L}$	=	annual volatile solids degraded in anaerobic manure storage/treatment system 'AS' from livestock category 'L' (kg dry matter)
$B_{0,L}$	=	maximum methane producing capacity of manure for livestock category 'L' (m^3 CH_4/kg of VS) – Appendix B, Table B.3
0.67	=	methane density conversion factor, m^3 to kg (at 20 °C and 1 atm pressure)
0.001	=	conversion factor from kg to metric tonnes
21	=	Global Warming Potential factor of methane to carbon dioxide equivalent

$$VS_{deg,AS,L} = \sum_{AS,L} VS_{avail,AS,L} \times f$$

Where,

$VS_{deg,AS,L}$	=	annual volatile solids degraded by anaerobic manure storage/ treatment system 'AS' by livestock category 'L' (kg dry matter)
$VS_{avail,AS,L}$	=	monthly volatile solids available for degradation from anaerobic manure storage/treatment system 'AS' by livestock category 'L'(kg dry matter)
f	=	the van't Hoff-Arrhenius factor = "the proportion of volatile solids that are biologically available for conversion to methane based on the monthly temperature of the system"[16]

Equation 2b continued

$$VS_{avail,AS,L} = \left(VS_L \times P_L \times MS_{AS,L} \times dpm \times 0.8\right) + \left(VS_{avail-1,AS} - VS_{deg-1,AS}\right)$$

Where,

[16] Mangino, et al.

$VS_{avail,AS,L}$	=	monthly volatile solids available for degradation in anaerobic storage/treatment system 'AS' by livestock category 'L'(kg dry matter)
VS_L	=	volatile solids produced by livestock category 'L' on a dry matter basis (kg/animal/day) – *Important* - refer to Box 2 for guidance on using appropriate units for VS_L values from Appendix B.
P_L	=	annual average population of livestock category 'L' (based on monthly population data)
$MS_{AS,L}$	=	percent of manure sent to (managed in) anaerobic manure storage/treatment system 'AS' from livestock category 'L' (%)[17]
dpm	=	days per month
0.8	=	system calibration factor[18]
$VS_{avail-1,AS}$	=	previous month's volatile solids available for degradation in anaerobic system 'AS' (kg)
$VS_{deg-1,AS}$	=	previous month's volatile solids degraded by anaerobic system 'AS' (kg)[19]

$$f = \exp\left[\frac{E(T_2 - T_1)}{RT_1T_2}\right]$$

Where,

f	=	the van't Hoff-Arrhenius factor
E	=	activation energy constant (15,175 cal/mol)
T_1	=	303.16K
T_2	=	monthly average ambient temperature (K = °C + 273). If T_2 < 5 °C then f = 0.104
R	=	ideal gas constant (1.987 cal/Kmol)

[17] The MS value represents the percent of manure that would be sent to (managed by) the anaerobic manure storage/treatment systems in the baseline case – as if the biogas control system was never installed.

[18] Mangino, et al. This factor was derived to "account for management and design practices that result in the loss of volatile solids from the management system."

[19] The difference between VSavail-1 and VSdeg-1 represents VS retained in the system and not removed at month's end; thus VS could accumulate over time. However, project developers should not carry-over volatile solids from one month to the next after a system has been cleaned out, such as temporary storage ponds or tanks where the VS-retention time might be 30 days. For these systems project developers do not add "(VSavail-1 – VSdeg-1)."

Equation 2c: Modeled baseline methane for non-anaerobic storage/treatment systems

$$BE_{CH4,nAS} = \left(\sum_{L,S} P_L \times MS_{L,nAS} \times VS_L \times 365 \times MCF_{nAS} \times B_{0,L} \right) \times 0.67 \times 0.001 \times 21$$

Where,

$BE_{CH4,nAS}$	=	total annual baseline methane emissions from non-anaerobic storage/treatment systems, expressed in carbon dioxide equivalent (tCO_2e/yr)
P_L	=	annual average population of livestock category 'L' (based on monthly population data
$MS_{L,nAS}$	=	percent of manure from livestock category 'L' managed in non-anaerobic storage/treatment systems (%)
VS_L	=	volatile solids produced by livestock category 'L' on a dry matter basis (kg/animal/day) – *Important* - refer to Box 2 for guidance on using appropriate units for VS_L values from Appendix B.
365	=	days in a year
$MCF_{,nAS}$	=	methane conversion factor for non-anaerobic storage/treatment system 'S' (%) – See Appendix B, Table B.5
$B_{0,L}$	=	maximum methane producing capacity for manure for livestock category 'L' (m^3 CH_4/kg of VS dry matter) – Appendix B, Table B.3
0.67	=	methane density conversion factor, m^3 to kg (at 20°C and 1 atm pressure)
0.001	=	conversion factor from kg to metric tonnes
21	=	Global Warming Potential factor of methane to carbon dioxide equivalent

Box 2: Daily volatile solids for all livestock categories

Consistent with international best-practice,[20] it is recommended that appropriate VS_L values for Dairy livestock categories be obtained from the State-specific lookup tables (Tables B.4.a – B.4.e) provided in Appendix B. When possible, use the year corresponding to the appropriate emission year. If the current year's table is not available, use the most current year.

VS_L values for all other livestock can be found in Appendix B, Table B.3.

Important - Units provided for all VS values in Appendix B are in (kg/day/1000kg), in order to get VS_L in the appropriate units (kg/animal/day), the following equation must be used:

$$VS_L = VS_{table} \times \frac{Mass_L}{1000}$$

Where,

VS_L	=	volatile solid excretion on a dry matter weight basis (kg/animal/day)
VS_{Table}	=	volatile solid excretion from lookup table (Tables B.3 and B.4.a - B.4.e) (kg/day/1000kg)
$Mass_L$	=	average live weight for livestock category 'L' (kg), if site specific data is unavailable, use values from Appendix B, Table B.2

[20] IPCC 2006 Guidelines (Volume 4, Chapter 10, p. 42); ACM0010 (V2, p.8); and EPA Climate Leaders Draft Offset Protocol (2006).

Modeled baseline methane calculation variables. The calculation procedure uses a combination of site-specific values and default factors.[21]

Population – P_L. The procedure requires project developers to differentiate between livestock categories ('L') – e.g. lactating dairy cows, non-milking dairy cows, heifers, etc. This accounts for differences in methane generation across livestock categories. See Appendix B, Table 2. The population of each livestock category is monitored on a monthly basis, and for Equation 2c averaged for an annual total population.

Volatile solids – VS_L. This value represents the daily organic material in the manure for each livestock category and consists of both biodegradable and non-biodegradable fractions. The VS content of manure is a combination of excreted fecal material (the fraction of a livestock category's diet consumed and not digested) and urinary excretions, expressed in a dry matter weight basis (kg/animal).[22] This protocol requires that the VS value for all livestock categories be determined as outlined in Box 2.

$Mass_L$. This value is the annual average live weight of the animals, per livestock category. This data is necessary because default VS values are supplied in units of kg/day/1000kg mass, therefore the average mass of the corresponding livestock category is required in order to convert the units of VS into kg/day/animal. Site specific livestock mass is preferred for all livestock categories. If site specific data is unavailable, Typical Average Mass (TAM) values can be used (Appendix B, Table B.2).

Maximum methane production – $B_{0,L}$. This value represents the maximum methane-producing capacity of the manure, differentiated by livestock category ('L') and diet. Project developers use the default B_0 factors from Appendix B, Table B.3.

MS. The MS value apportions manure from each livestock category to appropriate manure management system component ('S'). It reflects the reality that waste from the operation's livestock categories are not managed uniformly. The MS value accounts for the operation's multiple types of manure management systems. It is expressed as a percent (%), relative to the total amount of waste produced by the livestock category. As waste production is normalized for each livestock category, the percentage should be calculated as percent of population for each livestock category. For example, a dairy operation might send 85% of its milking cow's waste to an anaerobic lagoon and 15% could be deposited in a corral. In this situation an MS value of 85% would be assigned to equation 2b and 15% to equation 2c.

Importantly, the MS value indicates where the waste would be managed in the baseline scenario – i.e. where the manure would end-up if the digester was never installed.

Methane conversion factor – MCF. Each manure management system component has a volatile solids-to-methane conversion efficiency, which represents the degree to which maximum methane production (B_0) is achieved. Methane production is a function of the extent of anaerobic conditions present in the system, the temperature of the system, and the retention time of organic material in the system.[23]

[21] The Registry permits project developers to refine the calculation where appropriate with site-specific information. Justification and supporting documentation for the site-specific variables must be provided to project verifiers.
[22] IPCC 2006 Guidelines volume 4, chapter 10, p. 10.42.
[23] IPCC 2006 Guidelines volume 4, chapter 10, p. 10.43.

According to this protocol and similar to the RGGI Model Rule (January 5, 2007), for anaerobic lagoons, storage ponds, liquid slurry tanks etc., project developers perform a site-specific calculation of the mass of volatile solids degraded by the anaerobic storage/treatment system. This is expressed as "degraded volatile solids" or "VS_{deg}" in Equation 2b, which equals the system's monthly available volatile solids multiplied by "f," the van't Hoff-Arrhenius factor. The 'f' factor effectively converts total available volatile solids in the anaerobic manure storage/treatment system to methane-convertible volatile solids, based on the monthly temperature of the system.

The multiplication of "VS_{deg}" by "B_0" gives a site-specific quantification of the uncontrolled methane emissions that would have occurred in the absence of a digester – from the anaerobic storage and/or treatment system, taking into account each livestock category's contribution of manure to that system.

This method to calculate methane emissions reflects the site-specific monthly biological performance of the operation's anaerobic manure handling systems that existed pre-project, as predicted by the van't Hoff-Arrhenius equation using farm-level data on temperature, VS loading, and system VS retention time.[24]

Default MCF values for non-anaerobic manure storage/treatment are available in Appendix B, Table B.5, which are used for Equation 2c.

V.3 Project Methane Emissions

Project emissions are actual GHG emissions that occur within the GHG assessment boundary after the installation of the biogas control system. Project emissions are calculated on an annual, *ex-post* basis. But like baseline emissions, some parameters are monitored on a monthly basis. Methane emissions from manure storage and/or treatment systems other than the digester are modeled much the same as in the baseline scenario.

Project methane emissions. As shown in Equation 3, project methane emissions equal

- the amount of methane from waste treatment and storage not captured and destroyed by the control system, plus
- methane from the digester effluent storage pond (if necessary), plus
- methane from sources in the waste treatment and storage category other than the biogas control system and associated effluent pond. This includes all other manure treatment systems such as compost piles, solids storage, daily spread, etc.

Consistent with ACM0010 and this protocol's baseline methane calculation approach, the formula to account for project methane emissions incorporates all potential sources within the waste treatment and storage category. Non-biogas control system-related sources follow the same calculation approach as provided in the baseline methane equations. Several activity data for the variables in Equation 3c will be the same as those in Equation 2a – 2c.

V.4 Project Methane Emissions Equations

[24] The method is derived from Mangino et al., "Development of a Methane Conversion Factor to Estimate Emissions from Animal Waste Lagoons"

Equation 3: Project methane emissions

$$PE_{CH4} = [(PE_{CH4,\ BCS} + PE_{CH4,\ EP} + PE_{CH4,\ non\text{-}BCS}) \times 21]$$

Where,

PE_{CH4}	=	total annual project methane emissions, expressed in carbon dioxide equivalent (tCO_2e/yr)
$PE_{CH4,\ BCS}$	=	annual methane emissions from the Biogas Control System (tCH_4/yr) – equation 3a
$PE_{CH4,\ EP}$	=	annual methane emissions from the BCS Effluent Pond (tCH_4/yr) – equation 3b
$PE_{CH4,\ non\text{-}BCS}$	=	annual methane emissions from sources in the waste treatment and storage category other than the Biogas Control System and associated Effluent Pond (tCH_4/yr) – equation 3c
21	=	Global Warming Potential factor of methane to carbon dioxide equivalent

Equation 3a: Project methane emissions from the biogas control system

$$PE_{CH4,BCS} = (\mathrm{CH}_{4,\mathrm{meter}})\left((\frac{1}{BCE}) - BDE\right)$$

Where,

$PE_{CH4,\ BCS}$	=	monthly methane emissions from the Biogas Control System (tCH_4/yr), to be aggregated annually
$CH_{4,meter}$	=	the monthly quantity of methane collected and metered ($tCH_4/month$)
BCE	=	monthly methane collection efficiency of the Biogas Control System (% - as a decimal). The default value is 85% [25]
BDE	=	monthly methane destruction efficiency of the destruction device (% - as a decimal). In the event that there are is more than one destruction devices in operation in any given month, the weighted average destruction efficiency from all destruction devices is to be used (see BDE calculation below)

$$CH_{4,meter} = F \times (520/T)^{*} \times (P/1)^{*} \times CH_{4,conc} \times 0.0423 \times 0.000454$$

Where,

$CH_{4,meter}$	=	the monthly quantity of methane collected and metered ($tCH_4/month$) [26]
F	=	measured volumetric flow of Biogas per month (ft^3/month)

Equation 3a continued

T	=	Temperature of the Biogas flow in ^{o}R (Rankine). ($^{o}R = {}^{o}F + 459.67$)
P	=	Pressure of the Biogas flow in atm
$CH_{4,conc}$	=	measured methane concentration of Biogas from the most recent

[25] Project developers have the option to justify a higher BCS collection efficiency based on verifiable documentation.
[26] This value reflects directly measured biogas mass flow and methane concentration in the biogas to the combustion device.

		methane concentration measurement (% as a decimal)
0.0423	=	density of methane gas (lbsCH4/ft^3) at STP (1atm, 20°C)
0.000454	=	conversion factor, lbs to metric tons

** The terms (520/T) and (P/1) should be omitted if the continuous flow meter automatically corrects for temperature and pressure.*

$$BDE = \frac{\left(\begin{array}{l} (BDE_{of} \times F_{of}) + (BDE_{cf} \times F_{cf}) + (BDE_{lbic} \times F_{lbic}) + (BDE_{rbic} \times F_{rbic}) \\ + (BDE_{t} \times F_{t}) + (BDE_{b} \times F_{b}) + (BDE_{cng/\ln g} \times F_{cng/\ln g}) + (BDE_{ng} \times F_{ng}) \end{array} \right)}{F_{total}}$$

Where,

BDE_{of}	=	default methane destruction efficiency for open flare[27,28] = 0.96
F_{of}	=	total volume of gas fed to open flare (ft^3)
BDE_{cf}	=	default methane destruction efficiency for enclosed flare[27,29] = 0.995
F_{cf}	=	total volume of gas fed to enclosed flare (ft^3)
BDE_{lbic}	=	default methane destruction efficiency for lean-burn IC engine[27,29] = 0.936
F_{lbic}	=	total volume of gas fed to lean-burn IC engine (ft^3)
BDE_{rbic}	=	default methane destruction efficiency for rich-burn IC engine[27,29] = 0.995
F_{rbic}	=	total volume of gas fed to rich-burn IC engine (ft^3)
BDE_{t}	=	default methane destruction efficiency for microturbine or large gas turbine[27] = 0.995
F_{t}	=	total volume of gas fed to turbine (ft^3)
BDE_{b}	=	default methane destruction efficiency for boilers[27] = 0.98
F_{b}	=	total volume of gas fed to boiler (ft^3)
$BDE_{cng/lng}$	=	default methane destruction efficiency for upgrade and use of gas as cng/lng vehicle fuel = 0.95
$F_{cng/lng}$	=	total volume of gas upgraded for use as CNG/LNG fuel (ft^3)
BDE_{ng}	=	default methane destruction efficiency for upgrade and injection into NG pipeline[30] = 0.98

[27] If available, the official source tested methane destruction efficiency shall be used in Equations 3a and Equation 4 in place of the default methane destruction efficiency. Otherwise, project developers have the option to use either the default methane destruction efficiencies provided, or the site specific methane destruction efficiencies as provided by a state or local agency accredited source test service provider, for each of the combustion devices used in the project case.

[28] Seebold, J.G., et. Al., Reaction Efficiency of Industrial Flares, 2003

[29] The default destruction efficiencies for this source are based on a preliminary set of actual source test data provided by the Bay Area Air Quality Management District. The default destruction efficiency values are the lesser of the twenty fifth percentile of the data provided or 0.995. These default destruction efficiencies may be updated as more source test data is made available to the Reserve.

[30] The Revised 1996 IPCC Guidelines for National Greenhouse Gas Inventories gives a standard value for the fraction of carbon oxidized for gas combustion of 99.5% (Reference Manual, Table 1.6, page 1.29). It also gives a value for emissions from processing, transmission and distribution of gas which would be a very conservative estimate for losses in the pipeline and for leakage at the end user (Reference Manual, Table 1.58, page 1.121). These emissions are given as 118,000kgCH4/PJ on the basis of gas consumption, which is 0.6%. Leakage in the residential and commercial sectors is stated to be 0 to 87,000kgCH4/PJ, which equates to 0.4%, and in industrial plants and power station the losses are 0 to 175,000kg/CH4/PJ, which is 0.8%. These leakage estimates are compounded and multiplied. The methane destruction efficiency for bio gas injected into the natural gas transmission and distribution system can now be calculated as the product of these three efficiency factors, giving a total efficiency of (99.5% * 99.4% * 99.6%) 98.5% for residential and commercial sector users, and (99.5% * 99.4% * 99.2%) 98.1% for industrial plants and power stations.

F_{ng}	=	total volume of gas upgraded an injected into NG pipeline (ft^3)
F_{total}	=	total volume of biogas captured and metered from biogas control system (ft^3)

Equation 3b: Project methane emissions from the BCS effluent pond[31]

$$PE_{CH4,EP} = VS_{ep} \times B_{o,ep} \times 365 \times 0.67 \times MCF_{ep} \times 0.001$$

Where,

$PE_{CH4,EP}$	=	methane emissions from the Effluent Pond (tCH_4/year)
VS_{ep}	=	volatile solid to effluent pond (kg/day) – 30% of the average daily VS entering the digester[32]
$B_{o,ep}$	=	maximum methane producing capacity (m^3CH_4/kg of VS dry matter)[33]
365	=	number of days in a year
0.67	=	conversion factor for m^3 to kg
MCF_{ep}	=	methane conversion factor (%), Appendix B, Table B.5. Project developers should use the *liquid slurry* MCF value for effluent ponds
0.001	=	conversion factor from kg to metric tones

$$VS_{ep} = \left(\sum_{L} (VS_L \times P_L \times MS_{L,BCS}) \right) \times 0.3$$

Where,

VS_L	=	volatile solids produced by livestock category 'L' on a dry matter basis (kg/animal/day) – *Important* - refer to Box 2 for guidance on using appropriate units for VS_L values from Appendix B
P_L	=	annual average population of livestock category 'L' (based on monthly population data
$MS_{L,BCS}$	=	percent of manure from livestock category 'L' that is managed in the Biogas Control System
0.3	=	default value representing the amount of Volatile Solids that exit the digester as a percentage of the Volatile Solids entering the digester

[31] If no effluent pond exists and project developers send digester effluent (VS) to compost piles or apply directly to land, for example, then the VS for these cases should also be tracked using equation 3b.
[32] Per ACM0010 (V2 Annex I).
[33] The B_o value for the project effluent pond is not differentiated by livestock category. Project developers could use the B_o value that corresponds with an average of the operation's livestock categories that contributes manure to the biogas control system. Supporting laboratory data and documentation need to be supplied to the verifier to justify the alternative value.

Equation 3c: Project methane emissions from *non*-biogas control system related sources[34]

$$PE_{CH4,nBCS} = \left(\sum_{L} (EF_{CH4,L}(nBCSs) \times P_L) \right) \times 0.001$$

Where,

$PE_{CH4,\ nBCS}$	=	methane from sources in the waste treatment and storage category other than the biogas control system and associated Effluent Pond (tCH_4/yr)
$EF_{CH4,L}$ *(nBCSs)*	=	emission factor for the livestock population ($kgCH_4$/head/year) from non-BCS-related sources – (calculated below)
P_L	=	population of livestock category 'L'
0.001	=	conversion factor from kg to metric tonnes

$$EF_{CH4,L}(nBCSs) = (VS_L \times B_{o,L} \times 365 \times 0.67) \times \left(\sum_{S} (MCF_S \times MS_{L,S}) \right)$$

Where,

$EF_{CH4,L}$ *(nBCSs)*	=	methane emission factor for the livestock population ($kgCH_4$/head/year) from non-biogas control system related sources
VS_L	=	volatile solids produced by livestock category 'L' on a dry matter basis (kg/animal/day) – *important* - refer to Box 2 for guidance on using appropriate units for VS_L values from Appendix B.
$B_{o,L}$	=	maximum methane producing capacity for manure for livestock category 'L' (m^3 CH_4/kg of VS dry matter), Appendix B, Table B.3 or B.4
365	=	number of days in a year
0.67	=	conversion factor for m^3 to kg
MCF_S	=	methane conversion factor for system component 'S' (%), Appendix B, Table B.5
$MS_{L,S}$	=	percent of manure from livestock category L that is managed in non-BCS system component 'S' (%)

V.5 Metered Methane Destruction Comparison

As described above, the Reserve requires all projects to compare the modeled methane emission reductions for the reporting period, as calculated in equations 2a - 2c and 3a - 3c above, with the actual metered amount of methane that is destroyed in the biogas control system over the same period. The lesser of the two values is to be used as the total methane emission reductions for the reporting period in question.

In order to calculate the metered methane reductions, the monthly quantity of biogas that is metered and destroyed by the biogas control system must be aggregated over the reporting period. In the event that a project developer is reporting reductions for a period of time that is

[34] According to this protocol, non-BCS-related sources means manure management system components (system component 'S') other than the biogas control system and the BCS effluent pond (if used).

less than a full year, the total modeled methane emission reductions would be aggregated over this time period and compared with the metered methane that is destroyed in the biogas control system over the same period of time. For example, if a project is reporting and verifying only 6 months of data, July – December for instance, then the modeled emission reductions over this 6 month period would be compared to the total metered biogas destroyed over the same six month period, and the lesser of the two values would be used as the total methane emission reduction quantity for this 6 month period.

Equation 4 below details the metered methane destruction calculation.

Equation 4: Metered methane destruction

$$CH_{4,destroyed} = \sum_{months} (CH_{4,meter} \times BDE) \times 21$$

Where,

$CH_{4,destroyed}$	=	The aggregated quantity of methane collected and destroyed (tCO2e/yr) during the reporting period
$CH_{4,meter}$	=	the monthly quantity of methane collected and metered (tCH4/month). See equation 3a for calculation guidance
BDE	=	the monthly methane destruction efficiency of the combustion device (% as a decimal). In the event that there is more than one destruction device in operation in any given month, the weighted average destruction efficiency from all combustion devices is to be used. See equation 3a for calculation guidance
21	=	Global Warming Potential factor of methane to carbon dioxide equivalent

Determining the methane emission reductions

- If $CH_{4,destroyed}$ is less than ($BE_{CH4} – PE_{CH4}$) as calculated in equations 2a - 2c and 3a - 3c for the reporting period, then the methane emission reductions are equal to $CH_{4,destroyed.}$
- Otherwise, the methane emission reductions are equal to ($BE_{CH4} – PE_{CH4}$).

V.6 Carbon Dioxide Emissions

Sources of carbon dioxide within the manure management system might not change as a result of the project, or could be insignificant. Therefore, project developers may conduct an assessment to determine if carbon dioxide emissions are considered de minimis. Project developers are only required to calculate and document fuel use for annual carbon dioxide emissions calculations if project carbon dioxide emissions show a variance greater than 5% of total baseline emissions. If project carbon dioxide emissions are found to be within 5% of total baseline emissions, then the project developer may use a best estimate technique to estimate these de minimis carbon dioxide emissions. All carbon dioxide must be reported within the GHG assessment boundary, including all estimated de minimis carbon dioxide emissions. [35]

For mobile and stationary combustion sources, project developers multiply the quantity of fuel consumed by a fuel-specific emission factor (see Equation 5 below). Examples of sources

[35] This is consistent with guidance in the California Registry's GRP and WRI's GHG Project Protocol regarding the treatment of significant secondary effects.

include fossil fuel generators to power pumping systems or milking parlor equipment, Bobcats that operate in barns or freestalls, or manure hauling trucks. Mobile sources include vehicles that transport manure off-site.

Carbon dioxide emissions from the combustion of biogas are considered biogenic emissions (as opposed to anthropogenic) and will not be included in the project emissions calculation.

For additional information on calculating mobile and stationary combustion sources, project developers can refer to the guidance in the California Registry's General Reporting Protocol.

Equation 5 below calculates the net change in anthropogenic carbon dioxide emissions resulting from the project activity.

Equation 5: Carbon dioxide emission calculations

$$CO_{2,net} = (BE_{CO2MSC} - PE_{CO2MSC})$$

Where,

$CO_{2,net}$	=	net change in anthropogenic carbon dioxide emissions from Mobile and Stationary Combustion sources resulting from project activity (tCO2/yr)
BE_{CO2MSC}	=	total annual baseline carbon dioxide emissions (tCO2/yr) from Mobile and Stationary Combustion sources (see equation below)
PE_{CO2MSC}	=	total annual project carbon dioxide emissions (tCO2/yr) from Mobile and Stationary Combustion sources (see equation below)

All stationary and mobile combustion are calculated using the equation:

$$CO_{2,MSC} = \left(\sum_{c} QF_c \times EF_{CO2,f} \right) \times 0.001$$

Where,

$CO2_{MSC}$	=	anthropogenic carbon dioxide emissions (tCO2) from Mobile and Stationary Combustion sources
$EF_{CO2,f}$	=	fuel-specific emission factor f (kg CO_2/MMBTU or kg CO_2/gallon), General Reporting Protocol Appendix C
QF_c	=	quantity of fuel consumed for each mobile and stationary emission source 'c' (MMBTU/yr or gallon/yr)
0.001	=	conversion factor from kg to metric tonnes

VI. Project Monitoring

Project developers are responsible for monitoring the performance of the project and operating the biogas control system in a manner consistent with the manufacturer's recommendations. According to this protocol, methane emissions from the biogas control system are monitored with measurement equipment that directly meters

- the continuous rate of biogas flow, and
- the methane concentration of the biogas to the destruction devices, on a quarterly basis, and
- the continuous flow rate of biogas to each destruction device.

The hourly operational activity of the biogas collection system and the destruction devices shall be monitored and documented to ensure actual methane destruction. GHG reductions will not be accounted for during periods which the destruction device was not operational. The measurement equipment is sensitive for gas quality (humidity, particulate, etc.), so a strong QA/QC procedure for the calibration of this equipment is required. Monitoring instruments shall be inspected, cleaned and calibrated at least bi-annually. If a portable calibration instrument is used, such as a pitot tube or a calibrated portable gas analyzer, the portable instrument shall be calibrated at least annually at an ISO 17025 accredited laboratory.

Project developers shall create a written monitoring plan which describes the frequency of data acquisition, the record keeping plan (see section VII.2 for minimum record keeping requirements) and the frequency of instrument calibration activities. The monitoring plan shall also include QA/QC provisions to ensure that data acquisition and meter calibration are carried out consistently and with precision. Figure 2 represents the suggested arrangement of the biogas flow meters and methane concentration metering equipment.

Figure 2: Suggested arrangement of biogas metering equipment

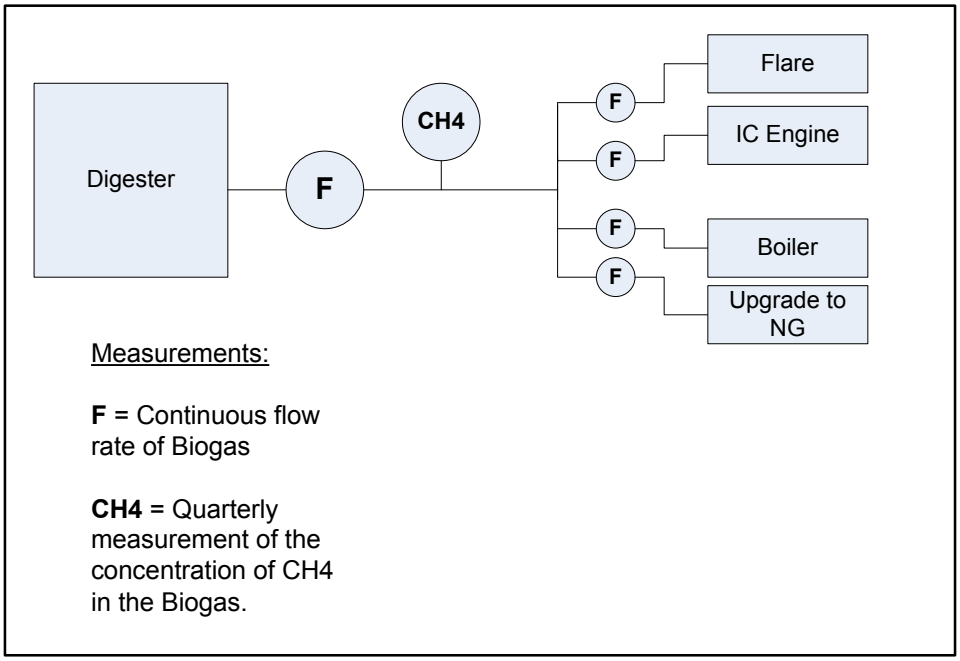

Note: The number of flow meters must be sufficient to track the total flow as well as the flow to each combustion device. The above scenario includes one more flow meter than would be necessary to achieve this objective.

Flow meters should be installed along the header pipe at a section that provides a straight section of pipe sufficient to provide laminar gas flow, as turbulent flow resulting from bends or obstructions in the pipe can cause interference with flow measurements which rely on differential pressure.[36]

In situations where the flow rate or methane concentration monitoring equipment has failed a calibration test (tested to be outside of allowable 5% margin of error), or is missing data, the project developer should apply the data substitution methods provided for under the US EPA Acid Rain Program in 40 CFR Part 75 Subpart D 75.33.[37]

In the event that the destruction device monitoring equipment is inoperable, then all metered biogas shall be assumed to be released to atmosphere during the period of inoperability by assuming a destruction efficiency of zero for the period of inoperability. In equation 3a the monthly destruction efficiency (BDE) value shall be adjusted accordingly. As an example, consider the primary destruction device to be an open flare with a BDE of 96% and it is found to be inoperable for a period of 5 days of a 30 day month. In this case the monthly BDE would be (0.96*25)/30 = 80%.

Provisions for monitoring other variables to calculate baseline and project emissions are provided in table 2. The parameters are organized by general project factors then by the calculation methods.

[36] Solid Waste Association of North America, 1997. Landfill gas operation and maintenance, manual of practice.
[37] Available at the Electronic Code of Federal Regulations website: www.gpoaccess.gov/cfr/index.html

Table 2: Project Monitoring Parameters

Parameter	Description	Data unit	calculated (c) measured (m) reference(r) operating records (o)	Measurement frequency	Comment
General Project Parameters					
Regulations	Project developer attestation to compliance with regulatory requirements relating to the manure digester project	Environmental regulations	n/a	Annual	Information used to: 1) To demonstrate ability to meet the Regulatory Test – where regulation would require the installation of a biogas control system. 2) To demonstrate compliance with associated environmental rules, e.g., criteria pollutant and effluent discharge limits. *Verifier:* Determine regulatory agencies responsible for regulating livestock operation; Review regulations and site permits pertinent to livestock operation
L	Type of livestock categories on the farm	Livestock categories	o	Monthly	Select from list provided in Appendix B, Table B.2. *Verifier:* Review herd management software; Conduct site visit; Interview operator.
MS_L	Fraction of manure from each livestock category managed in the baseline waste handling system 'S'	Percent (%)	o	Annually	Reflects the percent of waste handled by the system components 'S' pre-project. Applicable to the entire operation. Within each livestock category, the sum of MS values (for all treatment/storage systems) equals 100%. Select from list provided in Appendix B, Table B.1. *Verifier:* Conduct site visit; Interview operator; Review baseline scenario documentation.

Parameter	Description	Data unit	calculated (c) measured (m) reference(r) operating records (o)	Measurement frequency	Comment
P_L	Average number of animals for each livestock category	Population (# head)	o	Monthly	*Verifier*: Review herd management software; Review local air and water quality agency reporting submissions, if available (e.g., in CA, dairies with more than 500 cows report farm information to CARB).
$Mass_L$	Average live weight by livestock category	kg	o,r	Monthly	From operating records, or if onsite data is unavailable, from lookup table (Appendix B Table B.2). *Verifier*: Conduct site visit; Interview livestock operator; review average daily gain records, operating records.
T	Average monthly temperature at location of the operation	^oC	m/o	Monthly	Used for van't Hoff Calculation and for choosing appropriate MCF value. *Verifier*: Review temperature records obtained from weather service.
Baseline Methane Calculation Variables					
$B_{0,L}$	Maximum methane producing capacity for manure by livestock category	(m^3 CH_4/kgVS)	r	Annually	From Appendix B, Table B.3. *Verifier*: Verify correct value from table used.
MCF_S	Methane conversion factor for manure management system component 'S'	Percent (%)	r	Annually	From Appendix B, Table B.5 Differentiate by livestock category *Verifier*: Verify correct value from table used.
VS_L	Daily volatile solid production	(kg/animal/day)	r,c	Annually	Appendix B, Tables B.3 and B.4a-e; see Box 2 for guidance on converting units from (kg/day/1000kg) to (kg/animal/day). *Verifier*: Ensure appropriate year's table is used; review data units.

Parameter	Description	Data unit	calculated (c) measured (m) reference(r) operating records (o)	Measurement frequency	Comment
VS_{avail}	Monthly volatile solids available for degradation in each anaerobic storage system, for each livestock category	kg	c,o	Monthly	Calculated value from operating records. Recommend CCAR Livestock Calculation Tool for all calculations. *Verifier*: Ensure proper use of CCAR Livestock Calculation Tool, review operating records
VS_{deg}	Monthly volatile solids degraded in each anaerobic storage system, for each livestock category	Kg	c,o	Monthly	Calculated value from operating records. Recommend CCAR Livestock Calculation Tool for all calculations. *Verifier*: Ensure proper use of CCAR Livestock Calculation Tool, review operating records
f	van't Hoff-Arrhenius factor	n/a	c	Monthly	The proportion of volatile solids that are biologically available for conversion to methane based on the monthly temperature of the system. Recommend CCAR Livestock Calculation Tool for all calculations. *Verifier*: Ensure proper use of CCAR Livestock Calculation Tool, review calculation; review temperature data
Project Methane Calculation Variables – BCS + Effluent Pond					
$CH_{4,\ destroyed}$	Aggregated amount of methane collected and destroyed in the biogas control system	Metric tonnes of CH4	c,m	Annually	Calculated as the collected methane times the destruction efficiency (see the '$CH_{4,meter}$' and 'BDE' parameters below) *Verifier:* Review meter reading data, confirm proper operation of the destruction device(s), ensure data is accurately aggregated over the correct amount of time.

Parameter	Description	Data unit	calculated (c) measured (m) reference(r) operating records (o)	Measurement frequency	Comment
$CH_{4,meter}$	Amount of methane collected and metered in biogas control system	Metric tonnes of CH4 (tCH4)	c,m	Monthly	Calculated from biogas flow and methane fraction meter readings (See 'F' and '$CH_{4,conc}$' parameters below). *Verifier*: Review meter reading data; confirm proper operation, in accordance with the manufacturer's specifications, confirm meter calibration data.
F	Monthly volume of biogas from digester to destruction devices	ft^3/month	m	Continuously, aggregated monthly	Measured continuously from flow meter and recorded at least once every 15 minutes. Data to be aggregated monthly. *Verifier*: Review meter reading data; confirm proper aggregation of data; confirm proper operation in accordance with the manufacturer's specifications and confirm meter calibration data.
T	Temperature of the biogas	°R (Rankine)	m	Continuously, averaged Monthly	Measured to normalize volume flow of biogas to STP. No separate monitoring of temperature is necessary when using flow meters that automatically measure temperature and pressure, expressing biogas volumes in normalized cubic feet.
P	Pressure of the biogas	atm	m	Continuously, averaged Monthly	Measured to normalize volume flow of biogas to STP. No separate monitoring of pressure is necessary when using flow meters that automatically measure temperature and pressure, expressing biogas volumes in normalized cubic feet.

Parameter	Description	Data unit	calculated (c) measured (m) reference(r) operating records (o)	Measurement frequency	Comment
$CH_{4,conc}$	Methane concentration of biogas	Percent (%)	m	Quarterly	Use a direct sampling approach that yields a value with at least 95% confidence. Samples to be taken at least quarterly. Calibrate monitoring instrument in accordance with the manufacturer's specifications. *Verifier*: Review meter reading data; confirm proper operation, in accordance with the manufacturer's specifications.
BDE	Methane destruction efficiency of destruction device(s)	Percent (%)	r,c	Monthly	Reflects the actual efficiency of the system to destroy captured methane gas - accounts for different destruction devices. See guidance and default factors in equation 3a. *Verifier*: Confirm proper and continuous operation in accordance with the manufacturer's specifications.
BCE	Biogas capture efficiency of the anaerobic digester, accounts for gas leaks.	Percent (%)	r	Annually	Default value is 85%. Project developers may justify a higher BCE using verifiable evidence. *Verifier:* Review operation and maintenance records to ensure proper functionality of BCS. Assess claims that BCE is higher than default.
VS_{ep}	Average daily volatile solid of digester effluent to effluent pond	kg/day	c	Annually	If project uses effluent pond, equals 30% of the average daily VS entering the digester (From ACM0010 -V2 Annex I) *Verifier*: Review VS_{ep} calculations.

Parameter	Description	Data unit	calculated (c) measured (m) reference(r) operating records (o)	Measurement frequency	Comment
$MS_{L,BCS}$	Fraction of manure from each livestock category managed in the biogas control system	Percent (%)	o	Annually	Used to determine the total VS entering the digester. The percentage should be tracked in operational records. *Verifer*: Check operational records and conduct site visit.
Bo_{ep}	Maximum methane producing capacity for manure to effluent pond	(m^3 CH_4/kgVS)	c	Annually	An average of the Bo_{ep} value of the operation's livestock categories that contributes manure to the biogas control system. *Verifier:* Check calculation.
MCF_{ep}	Methane conversion factor for biogas control system effluent pond	Percent (%)	r	Annually	Appendix B, Table B.5, (From IPCC v.4, chapter 10, Table 10.17) Project developers should use the *liquid slurry* MCF value. *Verifier*: Verify value from table.
Project Methane Calculation Variables – Non-BCS Related Sources					
$MS_{L,S}$	Fraction of manure from each livestock category managed in non-anaerobic manure management system component 'S'	Percent (%)	o	Monthly	Based on configuration of manure management system, differentiated by livestock category. *Verifier*: Conduct site visit; interview operator.
$EF_{CH4,L}$ *(nBCSs)*	Methane emission factor for the livestock population from non-BCS-related sources	(kgCH_4/head/year)	c	Annually	Emission factor for all non-BCS storage systems, differentiated by livestock category. See equation 3c. *Verifiers*: review calculation, operations records.
Baseline and Project CO2 Calculation Variables					
$EF_{CO2,f}$	Fuel-specific emission factor for mobile and stationary combustion sources	kg CO2/MMBTU or kg CO2/gallon	r	Annually	Refer to CCAR GRP V.3.0 for emission factors. If biogas produced from digester is used as an energy source, the EF is zero. *Verifier*: review emission factors

Parameter	Description	Data unit	calculated (c) measured (m) reference(r) operating records (o)	Measurement frequency	Comment
QF_c	Quantity of fuel used for mobile/stationary combustion sources	MMBTU/year Or Gallon/year	o,c	Annually	Fuel used by project for manure collection, transport, treatment/storage, and disposal, and stationary combustion sources including supplemental fossil fuels used in combustion device. *Verifer:* Review operating records and quantity calculation.

VII. Reporting Parameters

This section provides guidance on reporting rules and procedures. A priority of the Reserve is to facilitate consistent and transparent information disclosure among project developers. All direct methane and carbon dioxide must be reported within the GHG assessment boundary, including all estimated de minimis carbon dioxide emissions. Project developers must submit verified emission reduction reports to the Reserve, and it is recommended that the Reserve Livestock Calculation Tool be used for all calculations.

VII.1 Project submittal documentation

Project developers provide the following information to the Reserve before registering reductions associated with the installation of a biogas control system.

- Completed project submittal form (see Appendix D)
- Signed attestation of title document
- Complete project verification report
- Positive verification opinion document

At a minimum, the above project documentation will be available to the public via the Reserve.[38] Project developers will also have the option to make other documentation available for public viewing, such as the Reserve Livestock Calculation Tool.

[38] Project Submittal forms and project registration information can be found at: http://www.climateregistry.org/offsets/project-registration.html .

VII.2 Record Keeping

For purposes of independent verification and historical documentation, project developers shall be required to keep all information outlined in this protocol for a period of 10 years after the information is generated or 7 years after the last verification.

System Information:

- All data inputs for the calculation of the baseline emissions and project emission reductions
- CO2e annual tonnage calculations
- Relevant sections of the biogas control system operating permits
- Project developer attestation to compliance with regulatory requirements relating to the livestock project
- Project developer attestation that the livestock project was not undertaken to become compliant with any regulatory requirements
- Biogas control system information (installation dates, equipment list, etc.)
- Biogas flow meter information (model number, serial number, manufacturer's calibration procedures)
- Methane monitor information (model number, serial number, calibration procedures)
- Biogas flow data (for each flow meter)
- Biogas flow meter calibration data (for each flow meter)
- Biogas temperature and pressure readings (only if flow meter does not correct for temperature and pressure automatically)
- Methane concentration monitoring data
- Methane concentration monitor calibration data
- Destruction device monitoring data (for each destruction device)
- Destruction device, methane monitor and biogas flow monitor information (model numbers, serial numbers, calibration procedures)
- Initial and annual verification records and results
- All maintenance records relevant to the biogas control system, monitoring equipment, and destruction devices.

If using a calibrated portable gas analyzer for CH4 content measurement

- Date, time, and location of methane measurement
- Methane content of biogas (% by volume) for each measurement
- Methane measurement instrument type and serial number
- Date, time, and results of instrument calibration
- Corrective measures taken if instrument does not meet performance specifications

VII.3 Reporting cycle

For the purposes of this protocol, project developers report GHG reductions associated with installing a biogas control system that occurred the preceding year. Although projects must be verified annually at a minimum, the Reserve will accept verified emission reduction reports on a sub-annual basis, should the project developer choose to have a sub-annual verification schedule (i.e. monthly, quarterly, etc.).

VII.4 Project crediting period

Project developers are eligible to register GHG reductions with the Reserve according to this protocol for a period of ten years. The first reduction year commences the year the biogas control system becomes operational. As described above, a system is operating if it is capturing and destroying methane gas from the treatment of the project developer's livestock waste.

VII.5 Non-Climate Action Reserve reporting

The Reserve requests that project developers only register reductions from manure management GHG reduction projects with one registry. However, under a voluntary system, enforcement authority is limited. Therefore, if a project developer participates in this program it is their responsibility to transparently disclose the registration of all reductions associated with the project activity that occur outside of the Reserve. In the event that GHG reductions from the project were previously registered with or claimed by another registry or program, or sold to a third party prior to submitting the project to the Reserve, a Project Transfer Form must be completed and submitted to the Reserve along with other project listing documentation. If the Registry determines that duplicative emissions reductions registration has occurred, all duplicate reductions reported with the Registry will be made void.

VIII. Glossary of Terms

Accredited verifier: A verification firm approved by the Reserve to provide verification services for project developers.

Additionality: Manure Management practices that are above and beyond business-as-usual operation, exceed the baseline characterization, and are not mandated by regulation.

Anaerobic: Pertaining to or caused by the absence of oxygen.

Anthropogenic Emissions: GHG emissions resultant from human activity that are considered to be an unnatural component of the Carbon Cycle (i.e. fossil fuel combustion, de-forestation etc.).

Biogas: The mixture of gas (largely methane) produced as a result of the anaerobic decomposition of livestock manure.

Biogas Control System (BCS): A system designed to capture and destroy the biogas that is produced by the anaerobic treatment and/or storage of livestock manure and/or other organic material. Commonly referred to as a "digester."

Biogenic CO_2 Emissions: CO_2 emissions resulting from the combustion and/or aerobic decomposition of organic matter. Biogenic emissions are considered to be a natural part of the carbon cycle, as opposed to anthropogenic emissions.

Carbon dioxide (CO_2): The most common of the six primary greenhouse gases, consisting of a single carbon atom and two oxygen atoms.

CO_2 Equivalent (CO_2e): The quantity of a given GHG multiplied by its total global warming potential. This is the standard unit for comparing the degree of warming which can be caused by different GHGs.

De minimis: Those emissions reported for a source or sources that are calculated using alternative methods selected by the operator, subject to the limits specified in this protocol.

Direct Emissions: Greenhouse gas emissions from sources that are owned or controlled by the reporting entity.

Emission factor: A unique value for determining an amount of a greenhouse gas emitted for a given quantity of activity data (e.g. metric tonnes of carbon dioxide emitted per barrel of fossil fuel burned.).

Flare: A destruction device that uses an open flame to burn combustible gases with combustion air provided by uncontrolled ambient air around the flame.

Fossil fuel: A fuel, such as coal, oil, and natural gas, produced by the decomposition of ancient (fossilized) plants and animals.

Greenhouse gas (GHG): means carbon dioxide (CO_2), methane (CH_4), nitrous oxide (N_2O), sulfur hexafluoride (SF_6), hydrofluorocarbons (HFCs), or perfluorocarbons (PFCs).

Global Warming Potential (GWP): The ratio of radiative forcing (degree of warming to the atmosphere) that would result from the emission of one unit of a given GHG compared to one unit of CO_2.

Indirect Emissions: Emissions that are a consequence of the actions of a reporting entity, but are produced by sources owned or controlled by another entity.

Livestock Project: Installation of a Biogas Control System that, in operation, causes a decrease in GHG emissions from the baseline scenario through destruction of the methane component of biogas.

Metric tonne (MT) or "tonne": A common international measurement for the quantity of GHG emissions, equivalent to about 2204.6 pounds or 1.1 short tons.

Methane (CH4): a potent GHG with a GWP of 21, consisting of a single carbon atom and four hydrogen atoms.

MMBtu: One million British thermal units.

Mobile combustion: Emissions from the transportation of materials, products, waste, and employees resulting from the combustion of fuels in company owned or controlled mobile combustion sources (e.g. cars, trucks, tractors, dozers, etc.).

Nitrous oxide (N_2O): a GHG consisting of two nitrogen atoms and a single oxygen atom.

Project Baseline: A business-as-usual GHG emission assessment against which GHG emission reductions from a specific GHG reduction activity are measured.

Project Developer: An entity that undertakes a project activity, as identified in the Livestock Project Protocol. A project developer may be an independent third party or the Dairy/Swine operating entity.

Stationary combustion source: A stationary source of emissions from the production of electricity, heat, or steam, resulting from combustion of fuels in boilers, furnaces, turbines, kilns, and other facility equipment.

van't Hoff-Arrhenius factor: The proportion of volatile solids that are biologically available for conversion to methane based on the monthly temperature of the system.[39]

Verification: The process used to ensure that a given participant's greenhouse gas emissions or emissions reductions have met the minimum quality standard and complied with the Reserve's procedures and protocols for calculating and reporting GHG emissions and emission reductions.

Verification body: A Reserve and state of California accredited firm that is able to render a verification opinion and provide verification services for operators subject to reporting under this protocol.

[39] Mangino, et al.

IX. References

American Society of Agricultural Engineers, Standard: ASAE D384.2 (2005).

Intergovernmental Panel on Climate Change, Good Practice Guidance and Uncertainty Management in National Greenhouse Gas Inventories (2001).

Intergovernmental Panel on Climate Change, IPCC Guidelines for National Greenhouse Gas Inventories, Chapter 10: Emissions from Livestock and Manure Management (2006).

Intergovernmental Panel on Climate Change, IPCC Guidelines for National Greenhouse Gas Inventories, Chapter 11: N20 Emissions from Managed Soils, and CO2 Emissions from Lime and Urea Application (2006).

Regional Greenhouse Gas Initiative, Draft Model Rule (January 2007).

Mangino, J., Bartram, D. and Brazy, A. Development of a methane conversion factor to estimate emissions from animal waste lagoons. Presented at U.S. EPA's 17th Annual Emission Inventory Conference, Atlanta GA, April 16-18, 2001.

Solid Waste Association of North America, Landfill gas operation and maintenance, manual of practice (1997)

Seebold, J.G., et. Al., Reaction Efficiency of Industrial Flares: The Perspective of the Past (2003)

United Nations Framework Convention on Climate Change (UNFCCC), Revisions to the Approved Consolidated Baseline Methodology ACM0010, “Consolidated baseline methodology for greenhouse gas emission reductions from manure management systems,” Clean Development Mechanism, Version 02, Sectoral Scopes 13 and 15 (2006).

U.S. Department, of Agriculture Natural Resources Conservation Service, Conservation Practice Standard, Anaerobic Digester—Ambient Temperature, No. 365

U.S. Department of Agriculture Natural Resources Conservation Service, Conservation Practice Standard, Anaerobic Digester—Controlled Temperature, No. 366

U.S. Department of Agriculture Natural Resources Conservation Service, Conservation Practice Standard, Waste Storage Facility, No. 313

U.S. Department of Agriculture Natural Resources Conservation Service, Conservation Practice Standard, Waste Treatment Lagoon, No. 359

U.S. Department of Energy 1605(b) Technical Guidelines for Voluntary Reporting of Greenhouse Gas Program

U.S. Environmental Protection Agency, Inventory of U.S. Greenhouse Gas Emissions and Sinks: 1990-2002, 1990-2003, 1990-2004, 1990-2005, and 1990-2006.

U.S. Environmental Protection Agency - Climate Leaders, Draft Manure Offset Protocol, (October 2006).

Association of State Energy Research and Technology Transfer Institutions (ASERTTI), U.S. Environmental Protection Agency AgStar Program, and U.S. Department of Agriculture Rural Development, Protocol for Quantifying and Reporting the Performance of Anaerobic Digestion Systems for Livestock Manures (January 2007).

World Resource Institute and World Business Counsel for Sustainable Development, Greenhouse Gas Protocol for Project Accounting (November 2005).

Appendix A – Associated Environmental Impacts

Manure management projects have many documented environmental benefits, including air emissions reductions, water quality protection, and electricity generation. These benefits are the result of practices and technologies that are well managed, well implemented, and well designed. However, in cases where practices or technologies are poorly or improperly designed, implemented, and/or managed, local air and water quality could be compromised.

With regard to air quality, there are a number of factors that must be considered and addressed to realize the environmental benefits of a biogas project and reduce or avoid potential negative impacts. Uncontrolled emissions from combustion of biogas may contain between 200 to 300 ppm NOx. The anaerobic treatment process creates intermediates such as ammonia, hydrogen sulfide, orthophosphates, and various salts, all of which must be properly controlled or captured. In addition, atmospheric releases at locations off-site where bio-gas is shipped may negate or decrease the benefit of emissions controls on-site. Thus, while devices such as Selective Catalyst Reduction (SCR) units can reduce NOx emissions and proper treatment system operation can control intermediates, improper design or operation may lead to violations of federal, state, and local air quality regulations as well as release of toxic air contaminants.

With regard to water quality, it is critical that project developers and managers ensure digester integrity and fully consider and address post-digestion management of the effluent in order to avoid contamination of local waterways and groundwater resources. Catastrophic digester failures; leakage from pipework and tanks; and lack of containment in waste storage areas are all examples of potential problems. Further, application of improperly treated digestate and/or improper application timing or rates of digestate to agricultural land may lead to increased nitrogen oxide emissions, soil contamination, and/or nutrient leaching, thus negating or reducing benefits of the project overall.

Project developers must not only follow the protocol to register GHG reductions with the Reserve, they must also comply with all local, state, and national air and water quality regulations. Projects must be designed and implemented to mitigate potential releases of pollutants such as those described, and project managers must acquire the appropriate local permits prior to installation to prevent violation of the law.

The Reserve agrees that GHG emission reduction projects should not undermine air and water quality efforts and will work with stakeholders to establish initiatives to meet both climate-related and localized environmental objectives.

Appendix B – Emission Factor Tables

Table B.1: Manure management system components

System	Definition
Pasture/Range/ Paddock	The manure from pasture and range grazing animals is allowed to lie as deposited, and is not managed.
Daily spread	Manure is routinely removed from a confinement facility and is applied to cropland or pasture within 24 hours of excretion.
Solid storage	The storage of manure, typically for a period of several months, in unconfined piles or stacks. Manure is able to be stacked due to the presence of a sufficient amount of bedding material or loss of moisture by evaporation.
Dry lot	A paved or unpaved open confinement area without any significant vegetative cover where accumulating manure may be removed periodically.
Liquid/Slurry	Manure is stored as excreted or with some minimal addition of water in either tanks or earthen ponds outside the animal housing, usually for periods less than one year.
Uncovered anaerobic lagoon	A type of liquid storage system designed and operated to combine waste stabilization and storage. Lagoon supernatant is usually used to remove manure from the associated confinement facilities to the lagoon. Anaerobic lagoons are designed with varying lengths of storage (up to a year or greater), depending on the climate region, the volatile solids loading rate, and other operational factors. The water from the lagoon may be recycled as flush water or used to irrigate and fertilize fields.
Pit storage below animal confinements	Collection and storage of manure usually with little or no added water typically below a slatted floor in an enclosed animal confinement facility, usually for periods less than one year.
Anaerobic digester	Animal excreta with or without straw are collected and anaerobically digested in a large containment vessel or covered lagoon. Digesters are designed and operated for waste stabilization by the microbial reduction of complex organic compounds to CO2 and CH4, which is captured and flared or used as a fuel.
Burned for fuel	The dung and urine are excreted on fields. The sun dried dung cakes are burned for fuel.
Cattle and Swine deep bedding	As manure accumulates, bedding is continually added to absorb moisture over a production cycle and possibly for as long as 6 to 12 months. This manure management system also is known as a bedded pack manure management system and may be combined with a dry lot or pasture.
Composting – in-vessel*	Composting, typically in an enclosed channel, with forced aeration and continuous mixing.
Composting – Static pile*	Composting in piles with forced aeration but no mixing.
Composting – Intensive windrow*	Composting in windrows with regular (at least daily) turning for mixing and aeration.
Composting – Passive windrow*	Composting in windrows with infrequent turning for mixing and aeration.
Aerobic treatment	The biological oxidation of manure collected as a liquid with either forced or natural aeration. Natural aeration is limited to aerobic and facultative ponds and wetland systems and is due primarily to photosynthesis. Hence, these systems typically become anoxic during periods without sunlight.

*Composting is the biological oxidation of a solid waste including manure usually with bedding or another organic carbon source typically at thermophilic temperatures produced by microbial heat production.

Source: 2006 IPCC Guidelines for National Greenhouse Gas Inventories, Chapter 10: Emissions from Livestock and Manure Management, Table 10.18: Definitions of Manure Management Systems, p. 10.49.

Table B.2: Livestock categories and Typical Average Mass (TAM)

Livestock Category (L)	Livestock Typical Average Mass (TAM) in kg
Dairy cows (on feed)	604[b]
Non-milking dairy cows (on feed)	684[a]
Heifers (on feed)	476[b]
Bulls (grazing)	750[b]
Calves (grazing)	118[b]
Heifers (grazing)	420[b]
Cows (grazing)	533[b]
Nursery swine	12.5[a]
Grow/finish swine	70[a]
Breeding swine	198[b]

Sources for TAM:
[a.] American Society of Agricultural Engineers (ASAE) Standards 2005, ASAE D384.2.
[b.] Environmental Protection Agency (EPA), Inventory of US GHG Emissions and Sinks 1990-2006 (2007), Annex 3, Table A-161, pg. A-195.

Table B.3: Volatile Solids and Maximum Methane Potential by Livestock Category

Livestock category (*L*)	VS_L (kg/day/1,000 kg mass)	$B_{o,L}$ [b] (m^3 CH_4/kg VS added)
Dairy cows	See Appendix B Tables 4a-e	0.35*
Non-milking dairy cows	5.56	0.24**
Heifers	See Appendix B, Table 4a-e	0.17
Bulls (grazing)	6.04[b]	0.17
Calves (grazing)	6.41[b]	0.17
Heifers (grazing)	See Appendix B, Tables 4a-e	0.17
Cows (grazing)	See Appendix B, Tables 4a-e	0.17
Nursery swine	8.89[b]	0.48
Grow/finish swine	5.36[b]	0.48
Breeding swine	2.71[b]	0.35

* Value for Dairy lactating cows assumes a low roughage (high energy) diet.
** Value for Dairy dry cows assumes a high roughage (low energy) diet.
Sources:
[a.] American Society of Agricultural Engineers (ASAE) Standards 2005, ASAE D384.2, VS_L(kg/day per animal) from table 1.b (p.2) converted to (kg/day per 1,000 kg mass) using average Live Weight (kg)values from table 5c (p.7).
[b.] Environmental Protection Agency (EPA)-Climate Leaders, Draft Manure Offset Protocol, October 2006, Table IIa: Animal Waste Characteristics (VS, Bo, and N_{ex} rates), p. 18.

Table B.4.a: 2006 Volatile Solid default values for Dairy Cows, Heifers, Heifers-Grazing and Cows-Grazing by State (Kg/day/1,000 Kg mass)

State	VS Dairy Cow	VS Heifer	VS Heifer –Grazing	VS Cows-Grazing
Alabama	8.28	6.64	7.55	6.74
Alaska	7.87	7.09	9.96	8.71
Arizona	11.41	7.09	9.99	8.71
Arkansas	7.55	6.48	7.53	6.72
California	9.59	6.13	7.37	6.57
Colorado	9.98	6.10	6.93	6.19
Connecticut	8.87	6.10	7.42	6.62
Delaware	8.33	6.10	7.43	6.62
Florida	8.88	6.64	7.55	6.74
Georgia	9.45	6.64	7.56	6.74
Hawaii	8.20	7.09	9.97	8.71
Idaho	11.23	7.09	10.02	8.71
Illinois	8.84	6.10	7.45	6.63
Indiana	9.07	6.10	7.44	6.63
Iowa	9.11	6.10	7.46	6.63
Kansas	9.34	6.10	6.93	6.19
Kentucky	7.89	6.64	7.56	6.74
Louisiana	7.28	6.48	7.52	6.72
Maine	8.47	6.10	7.42	6.62
Maryland	8.23	6.10	7.43	6.62
Massachusetts	8.31	6.10	7.41	6.62
Michigan	9.70	6.10	7.44	6.63
Minnesota	8.66	6.10	7.45	6.63
Mississippi	8.38	6.64	7.55	6.74
Missouri	7.91	6.10	7.43	6.63
Montana	8.67	6.10	6.90	6.19
Nebraska	8.59	6.10	6.93	6.19
Nevada	10.68	7.09	9.99	8.71
New Hampshire	8.94	6.10	7.42	6.62
New Jersey	7.97	6.10	7.43	6.62
New Mexico	10.96	7.09	10.00	8.71
New York	8.75	6.10	7.44	6.62
North Carolina	9.53	6.64	7.56	6.74
North Dakota	7.53	6.10	6.91	6.19
Ohio	8.42	6.10	7.44	6.63
Oklahoma	8.58	6.48	7.55	6.72
Oregon	10.12	7.09	9.99	8.71
Pennsylvania	8.89	6.10	7.44	6.62
Rhode Island	8.28	6.10	7.42	6.62
South Carolina	8.86	6.64	7.55	6.74
South Dakota	8.66	6.10	6.92	6.19
Tennessee	8.64	6.64	7.56	6.74
Texas	10.02	6.48	7.56	6.72
Utah	10.55	7.09	10.00	8.71
Vermont	8.60	6.10	7.43	6.62
Virginia	9.17	6.64	7.56	6.74
Washington	11.47	7.09	10.01	8.71
West Virginia	7.73	6.10	7.43	6.62
Wisconsin	8.73	6.10	7.44	6.63
Wyoming	8.38	6.10	6.91	6.19

Source: Environmental Protection Agency (EPA)-US Inventory of GHG Sources and Sinks 1990-2006 (Draft) (2007), Annex A Table A -163 pg. A -186.

Table B.4.b: 2005 Volatile Solid default values for Dairy Cows, Heifers, Heifers-Grazing and Cows-Grazing by State (Kg/day/1,000 Kg mass)

State	VS Dairy Cow	VS Heifer	VS Heifer –Grazing	VS Cows-Grazing
Alabama	8.76	6.81	7.21	6.74
Alaska	11.03	6.81	9.47	8.71
Arizona	11.03	6.81	9.53	8.71
Arkansas	9.19	7.56	7.19	6.72
California	9.47	6.81	7.06	6.57
Colorado	8.97	6.81	6.66	6.19
Connecticut	8.62	6.13	7.09	6.62
Delaware	8.62	6.13	7.13	6.62
Florida	8.76	6.81	7.19	6.74
Georgia	8.76	6.81	7.22	6.74
Hawaii	11.03	6.81	9.49	8.71
Idaho	11.03	6.81	9.58	8.71
Illinois	8.74	6.81	7.14	6.63
Indiana	8.74	6.81	7.13	6.63
Iowa	8.74	6.81	7.16	6.63
Kansas	8.97	6.81	6.67	6.19
Kentucky	8.76	6.81	7.23	6.74
Louisiana	9.19	7.56	7.18	6.72
Maine	8.62	6.13	7.08	6.62
Maryland	8.62	6.13	7.11	6.62
Massachusetts	8.62	6.13	7.07	6.62
Michigan	8.74	6.81	7.13	6.63
Minnesota	8.74	6.81	7.14	6.63
Mississippi	8.76	6.81	7.21	6.74
Missouri	8.74	6.81	7.11	6.63
Montana	8.97	6.81	6.59	6.19
Nebraska	8.97	6.81	6.66	6.19
Nevada	11.03	6.81	9.54	8.71
New Hampshire	8.62	6.13	7.08	6.62
New Jersey	8.62	6.13	7.10	6.62
New Mexico	11.03	6.81	9.55	8.71
New York	8.62	6.13	7.13	6.62
North Carolina	8.76	6.81	7.20	6.74
North Dakota	8.97	6.81	6.63	6.19
Ohio	8.74	6.81	7.11	6.63
Oklahoma	9.19	7.56	7.23	6.72
Oregon	11.03	6.81	9.54	8.71
Pennsylvania	8.62	6.13	7.12	6.62
Rhode Island	8.62	6.13	7.08	6.62
South Carolina	8.76	6.81	7.21	6.74
South Dakota	8.97	6.81	6.64	6.19
Tennessee	8.76	6.81	7.21	6.74
Texas	9.19	7.56	7.24	6.72
Utah	11.03	6.81	9.55	8.71
Vermont	8.62	6.13	7.10	6.62
Virginia	8.76	6.81	7.23	6.74
Washington	11.03	6.81	9.59	8.71
West Virginia	8.62	6.13	7.09	6.62
Wisconsin	8.74	6.81	7.12	6.63
Wyoming	8.97	6.81	6.62	6.19

Source: Environmental Protection Agency (EPA)-US Inventory of GHG Sources and Sinks 1990-2005 (2006), Annex A Table A -163 pg. A -186.

Table B.4.c: 2004 Volatile Solid default values for Dairy Cows, Heifers, Heifers-Grazing and Cows-Grazing by State (Kg/day/1,000 Kg mass)

State	VS Dairy Cow	VS Heifer	VS Heifer –Grazing	VS Cows-Grazing
Alabama	8.47	6.81	7.24	6.74
Alaska	10.87	6.81	9.52	8.71
Arizona	10.87	6.81	9.57	8.71
Arkansas	8.55	7.56	7.23	6.72
California	9.35	6.81	7.12	6.57
Colorado	8.64	6.81	6.75	6.19
Connecticut	8.41	6.13	7.14	6.62
Delaware	8.41	6.13	7.26	6.62
Florida	8.47	6.81	7.21	6.74
Georgia	8.47	6.81	7.24	6.74
Hawaii	10.87	6.81	9.56	8.71
Idaho	10.87	6.81	9.68	8.71
Illinois	8.51	6.81	7.22	6.63
Indiana	8.51	6.81	7.2	6.63
Iowa	8.51	6.81	7.25	6.63
Kansas	8.64	6.81	6.75	6.19
Kentucky	8.47	6.81	7.28	6.74
Louisiana	8.55	7.56	7.19	6.72
Maine	8.41	6.13	7.11	6.62
Maryland	8.41	6.13	7.17	6.62
Massachusetts	8.41	6.13	7.11	6.62
Michigan	8.51	6.81	7.2	6.63
Minnesota	8.51	6.81	7.21	6.63
Mississippi	8.47	6.81	7.23	6.74
Missouri	8.51	6.81	7.17	6.63
Montana	8.64	6.81	6.61	6.19
Nebraska	8.64	6.81	6.75	6.19
Nevada	10.87	6.81	9.6	8.71
New Hampshire	8.41	6.13	7.11	6.62
New Jersey	8.41	6.13	7.15	6.62
New Mexico	10.87	6.81	9.64	8.71
New York	8.41	6.13	7.19	6.62
North Carolina	8.47	6.81	7.23	6.74
North Dakota	8.64	6.81	6.69	6.19
Ohio	8.51	6.81	7.18	6.63
Oklahoma	8.55	7.56	7.3	6.72
Oregon	10.87	6.81	9.62	8.71
Pennsylvania	8.41	6.13	7.18	6.62
Rhode Island	8.41	6.13	7.11	6.62
South Carolina	8.47	6.81	7.25	6.74
South Dakota	8.64	6.81	6.7	6.19
Tennessee	8.47	6.81	7.24	6.74
Texas	8.55	7.56	7.32	6.72
Utah	10.87	6.81	9.62	8.71
Vermont	8.41	6.13	7.15	6.62
Virginia	8.47	6.81	7.27	6.74
Washington	10.87	6.81	9.69	8.71
West Virginia	8.41	6.13	7.13	6.62
Wisconsin	8.51	6.81	7.17	6.63
Wyoming	8.64	6.81	6.66	6.19

Source: Environmental Protection Agency (EPA)-US Inventory of GHG Sources and Sinks 1990-2004 (2005), Annex 3 Table A -158 pg. A -186.

Table B.4.d: 2003 Volatile Solid default values for Dairy Cows, Heifers, Heifers-Grazing and Cows-Grazing by State (Kg/day/1,000 Kg mass)

State	VS Dairy Cow	VS Heifer	VS Heifer –Grazing	VS Cows-Grazing
Alabama	8.5	6.82	7.22	6.74
Alaska	10.87	6.82	9.5	8.71
Arizona	10.87	6.82	9.53	8.71
Arkansas	8.58	7.57	7.2	6.72
California	9.38	6.82	7.06	6.57
Colorado	8.68	6.82	6.67	6.19
Connecticut	8.44	6.14	7.13	6.62
Delaware	8.44	6.14	7.14	6.62
Florida	8.5	6.82	7.2	6.74
Georgia	8.5	6.82	7.22	6.74
Hawaii	10.87	6.82	9.52	8.71
Idaho	10.87	6.82	9.59	8.71
Illinois	8.54	6.82	7.15	6.63
Indiana	8.54	6.82	7.13	6.63
Iowa	8.54	6.82	7.17	6.63
Kansas	8.68	6.82	6.67	6.19
Kentucky	8.5	6.82	7.24	6.74
Louisiana	8.58	7.57	7.08	6.72
Maine	8.44	6.14	7.18	6.62
Maryland	8.44	6.14	7.11	6.62
Massachusetts	8.44	6.14	7.12	6.62
Michigan	8.54	6.82	7.13	6.63
Minnesota	8.54	6.82	7.14	6.63
Mississippi	8.5	6.82	7.21	6.74
Missouri	8.54	6.82	7.12	6.63
Montana	8.68	6.82	6.6	6.19
Nebraska	8.68	6.82	6.67	6.19
Nevada	10.87	6.82	9.54	8.71
New Hampshire	8.44	6.14	7.08	6.62
New Jersey	8.44	6.14	7.11	6.62
New Mexico	10.87	6.82	9.56	8.71
New York	8.44	6.14	7.14	6.62
North Carolina	8.5	6.82	7.21	6.74
North Dakota	8.68	6.82	6.64	6.19
Ohio	8.54	6.82	7.12	6.63
Oklahoma	8.58	7.57	7.24	6.72
Oregon	10.87	6.82	9.55	8.71
Pennsylvania	8.44	6.14	7.12	6.62
Rhode Island	8.44	6.14	7.08	6.62
South Carolina	8.5	6.82	7.22	6.74
South Dakota	8.68	6.82	6.64	6.19
Tennessee	8.5	6.82	7.22	6.74
Texas	8.58	7.57	7.25	6.72
Utah	10.87	6.82	9.55	8.71
Vermont	8.44	6.14	7.12	6.62
Virginia	8.5	6.82	7.23	6.74
Washington	10.87	6.82	9.59	8.71
West Virginia	8.44	6.14	7.1	6.62

State	VS Dairy Cow	VS Heifer	VS Heifer –Grazing	VS Cows-Grazing
Wisconsin	8.54	6.82	7.12	6.63
Wyoming	8.68	6.82	6.63	6.19

Source: Environmental Protection Agency (EPA)-US Inventory of GHG Sources and Sinks 1990-2003 (2004), Annex 3 Table 3 -90 pg. 187.

Table B.4.e: 2002 Volatile Solid default values for Dairy Cows, Heifers, Heifers-Grazing and Cows-Grazing by State (Kg/day/1,000 Kg mass)

State	VS Dairy Cow	VS Heifer	VS Heifer –Grazing	VS Cows-Grazing
Alabama	8.61	6.82	7.17	6.74
Alaska	10.86	6.82	9.44	8.71
Arizona	10.86	6.82	9.44	8.71
Arkansas	8.36	7.57	7.15	6.72
California	9.44	6.82	6.98	6.57
Colorado	8.53	6.82	6.55	6.19
Connecticut	8.52	6.14	7.04	6.62
Delaware	8.52	6.14	7.04	6.62
Florida	8.61	6.82	7.17	6.74
Georgia	8.61	6.82	7.17	6.74
Hawaii	10.86	6.82	9.44	8.71
Idaho	10.86	6.82	9.44	8.71
Illinois	8.38	6.82	7.04	6.63
Indiana	8.38	6.82	7.04	6.63
Iowa	8.38	6.82	7.04	6.63
Kansas	8.53	6.82	6.55	6.19
Kentucky	8.61	6.82	7.17	6.74
Louisiana	8.36	7.57	7.15	6.72
Maine	8.52	6.14	7.04	6.62
Maryland	8.52	6.14	7.04	6.62
Massachusetts	8.52	6.14	7.04	6.62
Michigan	8.38	6.82	7.04	6.63
Minnesota	8.38	6.82	7.04	6.63
Mississippi	8.61	6.82	7.17	6.74
Missouri	8.38	6.82	7.04	6.63
Montana	8.53	6.82	6.55	6.19
Nebraska	8.53	6.82	6.55	6.19
Nevada	10.86	6.82	9.44	8.71
New Hampshire	8.52	6.14	7.04	6.62
New Jersey	8.52	6.14	7.04	6.62
New Mexico	10.86	6.82	9.44	8.71
New York	8.52	6.14	7.04	6.62
North Carolina	8.61	6.82	7.17	6.74
North Dakota	8.53	6.82	6.55	6.19
Ohio	8.38	6.82	7.04	6.63
Oklahoma	8.36	7.57	7.15	6.72
Oregon	10.86	6.82	9.44	8.71
Pennsylvania	8.52	6.14	7.04	6.62
Rhode Island	8.52	6.14	7.04	6.62
South Carolina	8.61	6.82	7.17	6.74
South Dakota	8.53	6.82	6.55	6.19
Tennessee	8.61	6.82	7.17	6.74
Texas	8.36	7.57	7.15	6.72
Utah	10.86	6.82	9.44	8.71

State	VS Dairy Cow	VS Heifer	VS Heifer –Grazing	VS Cows-Grazing
Vermont	8.52	6.14	7.04	6.62
Virginia	8.61	6.82	7.17	6.74
Washington	10.86	6.82	9.44	8.71
West Virginia	8.52	6.14	7.04	6.62
Wisconsin	8.38	6.82	7.04	6.63
Wyoming	8.53	6.82	6.55	6.19

Source: Environmental Protection Agency (EPA)-US Inventory of GHG Sources and Sinks 1990-2002 (2003), Annex 3 Table 3 -79 pg. 177.

Table B.5: IPCC 2006 Methane Conversion Factors by Manure Management System Component/Methane Source 'S' [40]

MCF VALUES BY TEMPERATURE FOR MANURE MANAGEMENT SYSTEMS																					
System[a]		MCFs by average annual temperature (°C)																			Source and comments
		Cool					Temperate											Warm			
		≤ 10	11	12	13	14	15	16	17	18	19	20	21	22	23	24	25	26	27	≥ 28	
Pasture/Range/Paddock		1.0%					1.5%											2.0%			Judgement of IPCC Expert Group in combination with Hashimoto and Steed (1994).
Daily spread		0.1%					0.5%											1.0%			Hashimoto and Steed (1993).
Solid storage		2.0%					4.0%											5.0%			Judgement of IPCC Expert Group in combination with Amon et al. (2001), which shows emissions of approximately 2% in winter and 4% in summer. Warm climate is based on judgement of IPCC Expert Group and Amon *et al*. (1998).
Dry lot		1.0%					1.5%											2.0%			Judgement of IPCC Expert Group in combination with Hashimoto and Steed (1994).
Liquid/Slurry	With natural crust cover	10%	11%	13%	14%	15%	17%	18%	20%	22%	24%	26%	29%	31%	34%	37%	41%	44%	48%	50%	Judgement of IPCC Expert Group in combination with Mangino *et al*. (2001) and Sommer (2000). The estimated reduction due to the crust cover (40%) is an annual average value based on a limited data set and can be highly variable dependent on temperature, rainfall, and composition. When slurry tanks are used as fed-batch storage/digesters, MCF should be calculated according to Formula 1.
	Without natural crust cover	17%	19%	20%	22%	25%	27%	29%	32%	35%	39%	42%	46%	50%	55%	60%	65%	71%	78%	80%	Judgement of IPCC Expert Group in combination with Mangino *et al*. (2001). When slurry tanks are used as fed-batch storage/digesters, MCF should be calculated according to Formula 1.

[40] From 2006 IPCC Guidelines for National Greenhouse Gas Inventories, Chapter 10: Emissions from Livestock and Manure Management, Table 10.17

MCF VALUES BY TEMPERATURE FOR MANURE MANAGEMENT SYSTEMS

System[a]		MCFs by average annual temperature (°C)																			Source and comments
		Cool					Temperate											Warm			
		≤ 10	11	12	13	14	15	16	17	18	19	20	21	22	23	24	25	26	27	≥ 28	
Uncovered anaerobic lagoon		66%	68%	70%	71%	73%	74%	75%	76%	77%	77%	78%	78%	78%	79%	79%	79%	79%	80%	80%	Judgement of IPCC Expert Group in combination with Mangino *et al*. (2001). Uncovered lagoon MCFs vary based on several factors, including temperature, retention time, and loss of volatile solids from the system (through removal of lagoon effluent and/or solids).
Pit storage below animal confinements	< 1 month	3%					3%											3%			Judgement of IPCC Expert Group in combination with Moller *et a*l. (2004) and Zeeman (1994). Note that the ambient temperature, not the stable temperature is to be used for determining the climatic conditions. When pits used as fed-batch storage/digesters, MCF should be calculated according to Formula 1.
	> 1 month	17%	19%	20%	22%	25%	27%	29%	32%	35%	39%	42%	46%	50%	55%	60%	65%	71%	78%	80%	Judgement of IPCC Expert Group in combination with Mangino *et a*l. (2001). Note that the ambient temperature, not the stable temperature is to be used for determining the climatic conditions. When pits used as fed-batch storage/digesters, MCF should be calculated according to Formula 1.

MCF VALUES BY TEMPERATURE FOR MANURE MANAGEMENT SYSTEMS

System[a]		MCFs by average annual temperature (°C)																			Source and comments
		Cool					Temperate											Warm			
		≤ 10	11	12	13	14	15	16	17	18	19	20	21	22	23	24	25	26	27	≥ 28	
Anaerobic digester		0-100%					0-100%											0-100%			Should be subdivided in different categories, considering amount of recovery of the biogas, flaring of the biogas and storage after digestion. Calculation with Formula 1.
Burned for fuel		10%					10%											10%			Judgement of IPCC Expert Group in combination with Safley *et al*. (1992).
Cattle and Swine deep bedding	< 1 month	3%					3%											30%			Judgement of IPCC Expert Group in combination with Moller *et a*l. (2004). Expect emissions to be similar, and possibly greater, than pit storage, depending on organic content and moisture content.
Cattle and Swine deep bedding (cont.)	> 1 month	17%	19%	20%	22%	25%	27%	29%	32%	35%	39%	42%	46%	50%	55%	60%	65%	71%	78%	90%	Judgement of IPCC Expert Group in combination with Mangino *et al*. (2001).
Composting - In-vessel[b]		0.5%					0.5%											0.5%			Judgement of IPCC Expert Group and Amon *et al*. (1998). MCFs are less than half of solid storage. Not temperature dependant.
Composting - Static pile[b]		0.5%					0.5%											0.5%			Judgement of IPCC Expert Group and Amon *et al*. (1998). MCFs are less than half of solid storage. Not temperature dependant.
Composting - Intensive windrow[b]		0.5%					1.0%											1.5%			Judgement of IPCC Expert Group and Amon *et al*. (1998). MCFs are slightly less than solid storage. Less temperature dependant.
Composting – Passive windrow[b]		0.5%					1.0%											1.5%			Judgement of IPCC Expert Group and Amon *et al*. (1998). MCFs are slightly less than solid storage. Less temperature dependant.
Aerobic treatment		0%					0%											0%			MCFs are near zero. Aerobic treatment can result in the accumulation of sludge which may be treated in other systems. Sludge requires removal and has large VS values. It is important to identify the next management process for the sludge and estimate the emissions from that management process if significant.

a Definitions for manure management systems are provided in Table 1.
b Composting is the biological oxidation of a solid waste including manure usually with bedding or another organic carbon source typically at thermophilic temperatures produced by microbial heat production.

Appendix C – Summary of the Performance Standard Paper

The analysis to establish a Performance Standard for the Manure Management Project Protocol was undertaken by Science Applications International Corporation (SAIC) and independent consultant Kathryn Bickel. It took place at the end of 2006. The analysis culminated in a paper that provided a Performance Standard recommendation to support the Reserve's protocol development process, which the Reserve has incorporated into the protocol's eligibility rules (see Section III).[41]

The purpose of a Performance Standard is to establish a threshold that is significantly better than average greenhouse gas (GHG) production for a specified service, which, if met or exceeded by a project developer, satisfies the criterion of "additionality". The Reserve's project protocol focuses on the following direct emission reduction activity: capturing and combusting methane from managing livestock manure. Therefore, in this case the methane emissions correspond to GHG production, and manure treatment/storage correspond to the specified service.

The analysis to establish the Performance Standard evaluated U.S. and California-specific data on dairy and swine manure management systems. Ultimately, it recommended a practice-based/technology-specific GHG emissions Performance Standard – i.e., the installation of a manure digester (or biogas control system, more generally). The paper had the following sections:

- The livestock industry in the U.S. and California,
- Livestock manure management practices,
- GHG emissions from livestock manure management,
- Data on livestock manure management practices in the U.S. and California,
- Current and anticipated regulations in California impacting manure management practices,
- Recommendation for a performance threshold for livestock operations, and
- Considerations for baseline determinations.

Overview of data collection

Conditions for methane generation exist under manure treatment and storage, namely anaerobic lagoons and/or storage ponds. The distribution of livestock across different sized operations can be an important criterion when developing a livestock manure management Performance Standard. There is a general relationship between manure management practices and operation size, where larger operations (in terms of livestock numbers) tend to use manure management systems that treat and store waste in liquid form (i.e., flush or scrape/slurry systems), particularly in dairy and swine operations.[42]

U.S. and California livestock population data. The report presents data on livestock type and population in the U.S. It also describes the livestock industry in California in

[41] The full Performance Standard report is available on the Registry's website: http://www.climateregistry.org/PROTOCOLS/PIP/1/

[42] U.S. Inventory of Greenhouse Gas Emissions and Sinks: 1990-2004 (and earlier editions), US Environmental Protection Agency, Report # 430-R-06-002, April 2006. Available at: http://www.epa.gov/climatechange/emissions/usinventoryreport.html

relation to U.S. operations. Table C.1 shows that California raises 16.5% of all dairy cows in the US on only 3% of US dairy operations, indicating that California has relatively few but substantially sized diary operations.

Table C.1: Livestock Population Data for the U.S. and California, 2002

	US		California			
	# Farms	**# Animals**	**# Farms**	**# Animals**	**% of US Farms**	**% of US Animals**
Dairy	91,989	17,013,361	2,793	2,806,357	3.0%	16.5%
Beef	796,436	34,431,060	12,497	879,582	1.6%	2.6%
Hogs	78,895	60,405,103	1,521	163,465	1.9%	0.3%

Source: U.S. Department of Agriculture National Agricultural Statistics Service (2004)

U.S. data on manure management practices. A data source to assess national-level manure management practices comes from the Draft EPA Climate Leaders Manure Management Protocol.[43] It uses data on farm distribution and manure management systems from the Manure Management portion of the Inventory of U.S. Greenhouse Gas Emissions and Sinks: 1990 – 2004, uses data on the number of farms by farm size and geographic location from the 2002 Census of Agriculture.

Information compiled for the EPA's U.S. GHG Inventory also provided the Climate Leaders protocol with a breakdown of the assumed predominant manure management system in use for dairy and swine operations. Table C.2 and C.3 show data compiled for the systems in place in 2006.

Table C.2: Dairy and Swine Operations in the U.S. by Manure Management System

Animal	**Number of Operations by Manure Management System**						
	P/R/P	**Anaerobic Digester**	**Lagoon**	**Liquid/ Slurry**	**Solid Storage**	**Deep Pit**	**Total**
Dairy	72,487	62	4,453	4,345	9,494	1,147	91,989
Swine	53,230	18	6,571	6,303	1,129	11,643	78,894

Source: U.S. EPA - Climate Leaders, Draft Manure Offset Protocol, Table I.A

Table C.3. Dairy and Swine Operations by Size and Manure Management System

[43] http://www.epa.gov/climateleaders/docs/ClimateLeaders_DraftManureOffsetProtocol.pdf

Animal	Number of Operations by Farm Size and Manure Management System							
	Farm Size	**P/R/P**	**Anaerobic Digester**	**Lagoon**	**Liquid/ Slurry**	**Solid Storage**	**Deep Pit**	**Total**
Dairy	≥500 head	320	48	1,614	675	245	-	2,902
	200-499	3,213	9	617	652	54	-	4,546
	1-199	6,8954	5	2,223	3,017	9,195	1,147	84,541
Swine	≥2000 head	-	14	2,581	1,084	297	2,774	6,749
	200-2000	-	3	3,990	5,219	832	8,869	18,913
	1-199	53,230	1	-	-	-	-	53,231

Source: U.S. 2002 Census of Agriculture

The EPA Climate Leaders protocol focuses on the prevalence of anaerobic digesters for determining their performance threshold. Data on the implementation of anaerobic digesters at animal operations was taken from the Interim Draft Winter 2006 AgSTAR Digest. Of 91,988 dairy and 78,894 swine farm operations in the United States, a total of 80 anaerobic digesters are currently in operation: 62 (0.07%) for dairy manure and 18 (0.02%) for swine manure.

Data were also disaggregated in the Climate Leaders protocol to determine whether digester installation was a common practice in any animal production operation size range. As was shown in Table C.3, even at large animal production operations, very few digester systems are in place. At dairy farms with ≥500 head, only 1.7% of manure management systems include digesters, and of swine farms with >2000 head, only 0.2% have digesters.

Regarding swine operations, there are few large farms in California. As was noted previously, most swine in California (76%) are raised on only twelve operations with over 1,000 head each, while most farms with swine in California are very small and have less than 24 head. The majority of swine are then managed on large operations where the manure is very likely transported and stored in liquid form.

California data on manure management practices. The most comprehensive data source for California dairies comes from permit application data submitted to San Joaquin Valley (SJV) and South Coast (SC) Air Pollution Control Districts to meet air quality permit requirements. The data were provided by Applied GeoSolutions, which maintains a database of manure management practices from the permits.

The permit database includes information from 293 dairies housing approximately 1.2 million cows, which covers about 57% of California dairies with herds greater than 1,000 head. Most dairies (282) are in the San Joaquin Valley and the rest are in the South Coast.

Most permits from operators in the SJV report the use both freestall and drylot configurations (56%), a third report drylot only (33%), and a few report freestall only.[44] A single operator could choose more than one practice. The figures below show the percent of SJV and SC dairies, by dairy type, reporting the use of specific handling practices.

Figure C.1: Manure Handling Practices at SJV Dairies

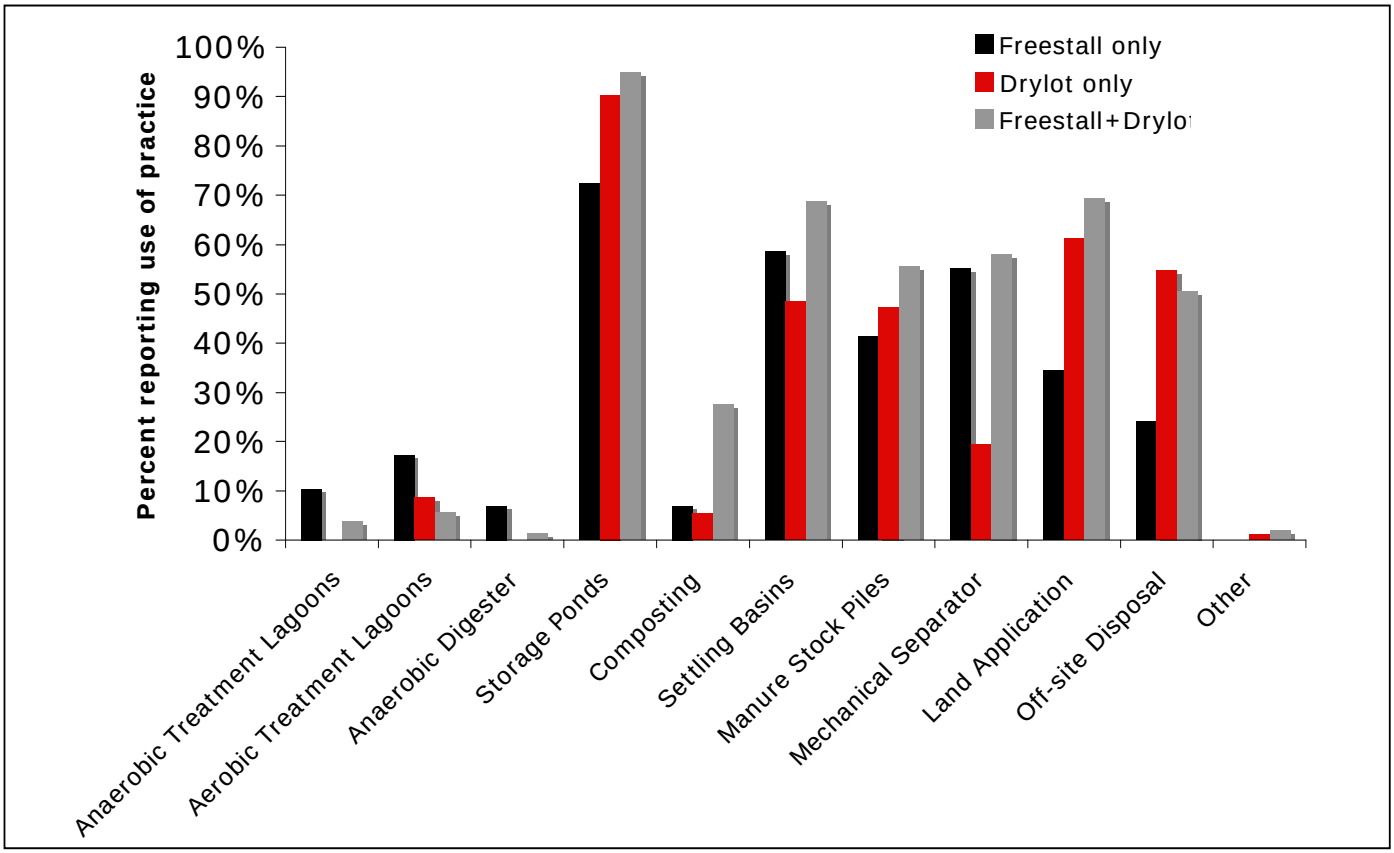

[44] Operators provided additional information on specific manure handling practices in the permit data.

Figure C.2: Manure Handling Practices at SC Dairies

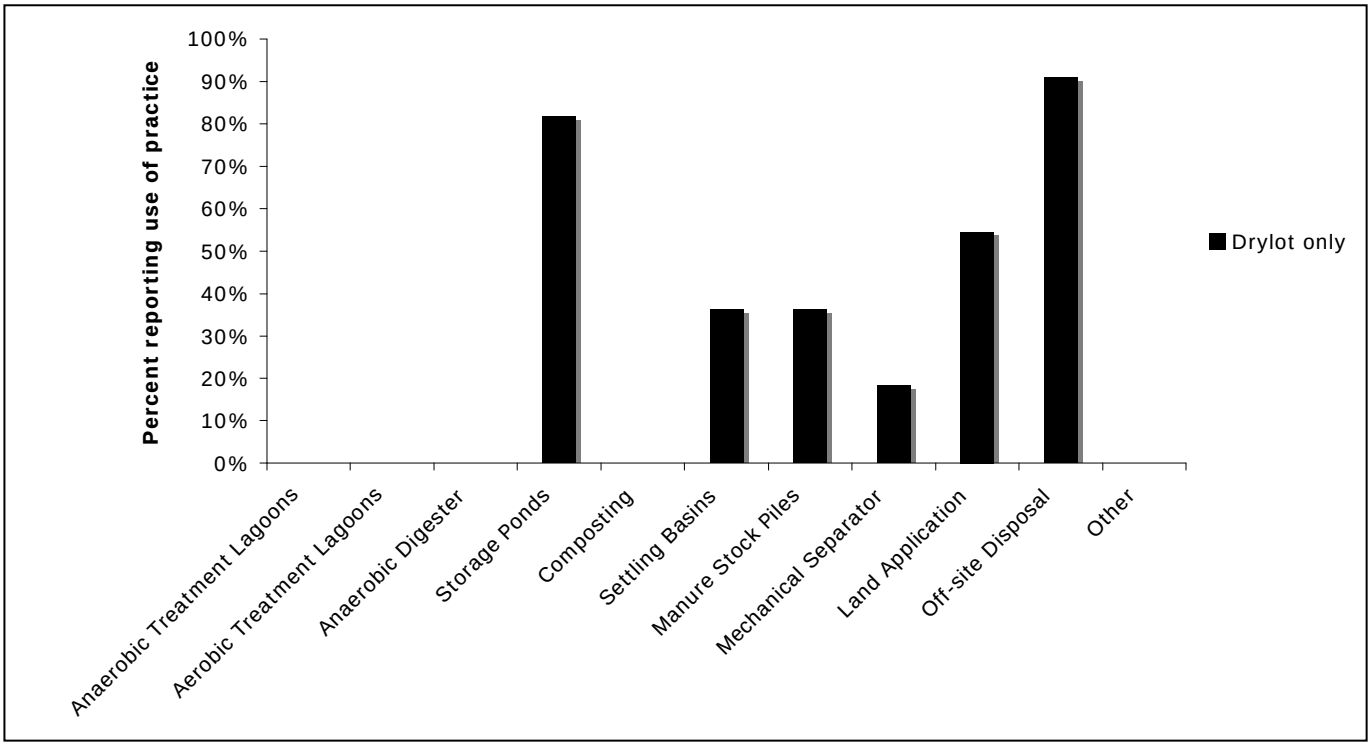

Based on the information contained in the San Joaquin Valley and South Coast permit database the report makes following key findings.

Liquid components:

- Most (91% of total) dairies report using storage ponds (fewer for freestall only operations because they are reporting their liquid storage in other categories, i.e., aerobic and anaerobic lagoons)
- Few (3% of total) report using anaerobic treatment lagoons (most are on freestall only operations)
- Few (8% of total) report using aerobic[45] treatment lagoons (most are on freestall only operations)
- Very few dairies (1% of total) report using anaerobic digesters (4 total, 2 on freestall only and 2 on freestall+drylot)

Dry components:

- Less than 10% of freestall only and drylot dairies, and less than 30% of freestall+drylot dairies use composting[46] (18% overall)
- Use of manure stockpiles ranges from ~40 to 55% (51% overall)
- 50-60% of freestall dairies (only and +drylot) use mechanical separation, compared to ~20% of drylots (45% overall)
- 50-70% use settling basins (more freestall and than drylots) (61% overall)

[45] These are believed to be "red" or phototropic lagoons used for odor control and not true aerobic lagoons according to personal communication with Paul Sousa at the Western United Dairymen.
[46] Composting is predominantly, if not entirely, windrow composting as per Paul Sousa - WUD

Current digester use in California. The report provides information from the EPA AgStar program, which offers technical support to livestock operators for installation and operation of anaerobic digesters. The Interim Draft Winter 2006 AgSTAR Digest states that there are 18 anaerobic digesters operating in California; only one is on a swine operation and the rest are on dairies. Eleven of the 17 dairy digesters are on operations with greater than 1,000 head. The uptake of digesters in California is less than 1% (0.6%) of the State's 2,793 dairies. And the 11 digesters operating on large dairies (>1000 dairy cows) calculates to 2.1% of this group (California has 517 dairies with more than 1000 cows – from the full report, Table 3, 'California Data on Livestock Operations, by Farm Size').

Additionally, the report considered the California Energy Commission's (CEC) 2006 Energy Action Plan, which states that a total of 14 projects have been approved for grants through 2005 totaling $5,792,370 under the Dairy Power Production Program (as of the end of 2006). It is unclear how many of these 14 digesters are currently operating and whether they are also captured in the AgStar database. Geographic information on the digester locations is available from a November 2004 map prepared by the CEC[47]. It shows 14 digester operations that convert methane to energy in the following air basins:

- SJV APCD – 8 digesters
- SCAQMD – 2 digesters
- BAAQMD – 1 digester
- South Central Coast (San Luis Obispo) – 1 digester
- San Diego Air Basin – 1 digester
- Mojave Desert Air Basin – 1 digester

Evaluation of regulatory requirements. The report evaluated recently passed regulations that affect the management of manure at dairies and at other livestock operations. The analysis included the San Joaquin Valley Air Pollution Control District's Rule 4570 adopted on June 15, 2006, which requires all large confined animal feeding operations (CAFs) to apply for permits and adopt various practices that will reduce volatile organic compounds, ammonia, and hydrogen sulfide emissions. The Sacramento Air Quality Management District adopted an almost identical rule – Rule 496 adopted August 24, 2006.

The report states that although the solid waste and liquid waste mitigation measures noted in Rule 4570 and Rule 496 could impact methane emissions, the rules are structured to allow large CAFs to select from a variety of control options – so there is no specific requirement for digesters to be installed. A summary of compliance options for Rule 4570 and Rule 496.

1. Non-permitted dairy below large CAF cutoff – drylot (continue current practice)
2. Non-permitted dairy below large CAF cutoff – freestall scrape (continue current practice)
3. Non-permitted dairy below large CAF cutoff – freestall flush (continue current practice)
4. Non-permitted swine farm below large CAF cutoff – continue current practice
5. Large CAF dairy – drylot – (assume pond converted to anaerobic lagoon or mechanical separator installed to comply with Rule 4570/496)

[47] http://www.energy.ca.gov/pier/renewable/biomass/pier_biogas_projects_maps/index.html

6. Large CAF dairy – freestall scrape (assume pond converted to anaerobic lagoon or mechanical separator installed to comply with Rule 4570/496)
7. Large CAF dairy – freestall flush (assume pond converted to anaerobic lagoon or mechanical separator installed to comply with Rule 4570/496)
8. Large CAF swine farm - assume pond converted to anaerobic lagoon or mechanical separator installed to comply with Rule 4570/496
9. New or modified large CAF– all categories (assume installation of anaerobic lagoon unless new BACT determination is made requiring digesters).

Performance Standard Recommendation

The report recommends that a Performance Standard apply to the control of methane emissions from dairy and swine livestock operations in the U.S. and California. In particular, the Performance Standard should be a technology-specific threshold that dairy or swine operators would meet. The threshold should be the installation of a biogas control system (anaerobic digester).

California serves as a good proxy for the U.S. regarding the level of digester use and the likelihood of its use as common practice. The data shows that California livestock operations (dairy, in particular) manage waste in a manner that is very suitable for digesters – i.e., liquid-based system. Yet even in these favorable conditions digester are found on less than 1% of the dairies. The report concludes that if a dairy operator chooses to install a digester than the farmer would be managing waste in the 99th percentile. This constitutes above and beyond common practice.

Moreover, the main barrier inhibiting the installation and use of digesters is cost. EPA's AgStar program has developed cost curves indicating that for a 4000 cow dairy, the cost of a covered lagoon digester is approximately $1 million, and $1.2 million for a plug flow digester. AgStar estimated digester costs are considerably less for a 1000 cow dairy - approximately $250,000 for the covered lagoon and $450,000 for the plug flow digester – but the generated methane volumes are proportionately less. A 2005 CEC study48 showed that the cost of biogas recovered (after considering amortized capital costs) from 14 plug flow digesters in the U.S. averaged $10.05 per cubic foot. The costs of recovered biogas were even higher for complete mix digesters – over $11 per cubic foot for 3 systems in the U.S. and over $16 per cubic foot for system in Denmark. These indicate non-commercial rates for gas recovered and that significant subsidies and/or incentives are needed to encourage additional digester installations.

[48] Commonwealth Energy Biogas/PV Mini-Grid Renewable Resources Program; "Making Renewables Part of an Affordable and Diverse Electric System in California;" Contract No. 500-00-036; Digester Comparison Study.

Appendix D – Livestock Project Submittal Forms

Livestock Project Submittal Forms

Instructions:

This project form must be submitted to the Reserve and to the verifier in the first year of reporting prior to verification. In some cases, it may be necessary to update parts of the Project Submittal Form in subsequent years. All information in this Form will be made publicly available.

These forms are to be used for reporting general Livestock Project information to the California Climate Action Registry in order to initiate the project listing process. All fields must be completed as thoroughly as is possible. If the project in question is still in the planning/development phase, all fields must be completed using best available data and estimations based on the proposed system design. Upon receipt of completed submittal forms, Registry staff will perform a general eligibility screen in accordance with the most current version of the California Climate Action Registry Livestock Project Reporting Protocol based on the information provided. Project Developers can expect an automated invoice for the $500 project listing fee within 15 days of submittal of the completed forms, and a decision regarding the status of the project within 15 days of the receipt of the project listing fee. If a project passes the eligibility screen, it will be officially "listed" with the Climate Action Reserve.

This is an interactive PDF form that can be filled out and saved as a PDF. All fields must be completed, if a field is not applicable insert N/A in the space provided. The completed form must be saved and uploaded to your Climate Action Reserve account. Submit all questions regarding the project submittal process to: reserve@climateregisry.org .

Version 2.2
August 2008

climate action reserve

Form1: General Information

1. Name of operation:

_____

2. Address (including county):

_____

3. Latitude/Longitude of Project (degrees/minutes/seconds):

_____

4. Description of the type of operation (*e.g.,* dairy, swine, *etc.*):

_____

5. If dairy,
    a. Breed (*e.g.,* Holstein, Guernsey, *etc.*):

       _____
    b. Average number of lactating cows:

       _____
    c. Average number of dry cows:

       _____
    d. Average number of replacements:

       _____
    e. Respective fraction of the manure from the milking herd, dry cows, and replacements that was sent to an anaerobic storage system pre-project

       _____
    f. Type(s) of manure collection system (e.g., scrape, flush, etc.) and frequency of manure collection:

       _____

6. If swine,
    a. Type of swine operation (e.g., farrow-to-wean, farrow plus nursery, farrow-to-finish, etc.):

    _____

    b. Average number of sows and pregnant gilts and number of litters per sow-year:

    _____

    c. Average number of nursery pigs and number of nursery stage cycles per year:

    _____

    d. Average number of feeder pigs and number of grow/finish cycles per year:

    _____

    e. Type(s) of manure collection systems (*e.g.,* flush, pull-plug pit, *etc.*) and frequency of manure collection:

    _____

7. For animal operations other than those listed above,
    a. Number and ages of animals:

    _____

    b. Type of manure collection system:

    _____

8. Diagrammatic representation of the waste management system existing on the project site prior to project implementation. (Upload as a separate PDF Titled: Baseline Management System Diagram)

9. Does/Did the baseline anaerobic waste handling system(s) comply with the specifications provided in the Natural Resources Conservation Service Conservation Practice Standard Waste Treatment Lagoon, No. 359, and/or Conservation Practice Standard, Waste Storage Facility, No. 313: Yes No

Comments (if any):

_____

10. Provide a summary of the permits obtained to build and operate the baseline anaerobic waste handling system(s).

_____

11. Is the project required by any local, state, or federal regulation? Yes No

Comments (if any):

_____

12. When did the project first commence operation, or when is the project expected to commence operation?

_____

13. What Version or publication date of the Livestock Project Reporting Protocol is the project documentation base upon?

_____

14. Has a detailed monitoring plan been developed for this project? If not, what date will a monitoring plan be in place?

_____

15. Have any vintage reduction tons from the project ever been registered with or claimed by another registry or program, or sold to another third party prior to submitting the project to the Reserve?

_____

If the answer is yes, you must complete and return a "*Project Transfer*" form.

climate action reserve

Form 2: Biogas Control System Information

1. Type of digester (*e.g.,* mixed, plug-flow, attached film, or covered lagoon):

_____

2. Name of system designer, address, and other contact information :

_____

3. Digester design assumptions
   a. Number and type of animals:

      _____

   b. For lactating cows, average live weight or average milk production:

      _____

   c. For swine, type or types (*e.g.,* gestating sows, lactating sows, feeder pigs, *etc.*) and average live weight:

      _____

   d. Manure volume, ft^3/day (m^3/day):

      _____

   e. Wastewater volume, ft^3/day (m^3/day) (*e.g.,* none, milking center wastewater, confinement facility wash-down, *etc.*):

      _____

   f. Other waste volume(s), ft^3/day (m^3/day) (*e.g.,* none, food processing wastes, *etc.*):

      _____

   g. Pretreatment before digestion (*e.g.,* none, gravity settling, stationary screen, screw press, *etc.*):

      _____

h. Treatment of digester effluent (*e.g.,* none, solids separation by screening, *etc.* with details including use or method of disposal):

_____

i. Method of digester effluent storage (*e.g.,* none, earthen pond, *etc.*):

_____

4. Physical description

a. General description including types of construction materials (*e.g.,* partially below grade, concrete channel plug-flow with flexible cover, *etc.*):

_____

b. Dimensions (length and width or diameter and height or depth):

_____

c. Type(s), location(s), and thickness(s) of insulation:

_____

d. Operating volume and ancillary biogas storage volume if present:

_____

e. Design hydraulic retention time:

_____

f. Design operating temperature:

_____

g. Does the biodigester waste handling system comply with the applicable Natural Resources Conservation Service Conservation Practice Standard (No. 365: Anaerobic Digester—Ambient Temperature or No. 366: Anaerobic Digester—Controlled Temperature): Yes No

Comments (if any):

_____

5. Description of local and state air and water quality regulations pertinent to the project:

---

6. Provide a summary of the permits obtained to build and operate the biodigester waste handling system.

---

climate action reserve

Form 3: Biogas Utilization Information

1. Biogas utilization (*e.g.,* none, generation of electricity, use on-site as a boiler or furnace fuel, or sale to a third party):

_____

2. If designed to generate electricity,
   a. Type of engine-generator set (*e.g.,* internal combustion engine, micro turbine or fuel cell with the name of the manufacturer, model, power output rating (kW or MJ) for biogas, and nominal voltage:

   _____

   b. Component integration (factory or owner):

   _____

   c. Origin of equipment controller (manufacturer integrated, third party off-the-shelf, or third party custom):

   _____

   d. System installer:

   _____

   e. Pretreatment of biogas (*e.g.,* none, condensate trap, dryer, hydrogen sulfide removal, *etc.* with the names of manufacturers, models, *etc.*) :

   _____

   f. Exhaust gas emission control (*e.g.,* none, catalytic converter, *etc.*):

   _____

   g. If interconnected with an electric utility
      - Name of the utility:

      _____

      - Type of utility contract (e.g., sell all/buy all, surplus sale, or net metering):

      _____

h. If engine-generator set waste heat utilization
Heat source (e.g., cooling system or exhaust gas or both) and heat recovery capacity (Btu or kJ/hr):

_____

- Waste heat utilization (*e.g.,* digester heating, water heating, space heating, *etc.*):

_____

3. If designed to use on-site as a boiler or furnace fuel, a description of the boiler or furnace including manufacturer, model, and rated capacity (Btu or kJ/hr):

_____

4. If designed for biogas sale to a third party, a description of the methods of processing, transport, and end use:

_____

a. Pretreatment of Biogas (e.g., none, condensate trap, dryer, hydrogen sulfide removal, etc.) include names of manufacturer, model etc.:

_____

b. Exhaust gas emission controls from gas processing step:

_____